SAMSUNG ELECTRONICS

Approval

TO : Acer/Inventec

DATE : Feb. 27, 2008

SAMSUNG TFT-LCD

MODEL NO. : LTN160AT01-A02

NOTE : Extension code [-A]
→ LTN160AT01-**A**02
Surface type [**Glare**]

APPROVED BY : K. H. Shin

PREPARED BY : Kevin Kim

LCD DEVELOPMENT G1. MOBILE DIVISION

SAMSUNG ELECTRONICS CO., LTD.

Samsung Secret

149911204085368

Approval

CONTENTS

Revision History - (3)

General Description - (4)

1. Absolute Maximum Ratings - (5)
   1.1 Absolute Ratings of environment
   1.2 Electrical Absolute Ratings

2. Optical Characteristics - (7)

3. Electrical Characteristics - (10)
   3.1 TFT LCD Module
   3.2 Backlight Unit
   3.3 Inverter

4. Block Diagram - (13)
   4.1 TFT LCD Module
   4.2 Backlight Unit
   4.3 Inverter Unit

5. Input Terminal Pin Assignment - (14)
   5.1 Input Signal & Power
   5.2 LVDS Interface
   5.3 Backlight Unit
   5.4 Timing Diagrams of LVDS For Transmitting
   5.5 Input Signals, Basic Display Colors and Gray Scale of Each Color.
   5.6 Pixel format

6. Interface Timing -- (19)
   6.1 Timing Parameters
   6.2 Timing Diagrams of interface Signal
   6.3 Power ON/OFF Sequence

7. Outline Dimension -- (21)

8. Packing -- -- (23)

9. Marking & Others --- -- - (24)

10. General Precaution --- (26)

11.EDID --- (28)

Samsung Secret

149911204085368

REVISION HISTORY

Approval

Date	Revision No.	Page	Summary
Feb .27. 2008	A00	All	LTN160AT01-A02 model spec was issued first.

Samsung Secret

GENERAL DESCRIPTION

DESCRIPTION

LTN160AT01-A02 is a color active matrix TFT (Thin Film Transistor) liquid crystal display (LCD) that uses amorphous silicon TFT as switching devices. This model is composed of a TFT LCD panel, a driver circuit and a backlight unit. The resolution of a 16.0" contains 1366 x 768 pixels and can display up to 262,144 colors. 6 O'clock direction is the optimum viewing angle.

FEATURES

- High contrast ratio, high aperture structure
- 1366 x 768 pixels resolution (16:9)
- High color Gamut (Typical 60%)
- Low power consumption
- Fast Response Time
- Single CCFL
- DE(Data enable) only mode
- 3.3V LVDS Interface
- Onboard EEDID chip
- RoHS Compliance

APPLICATIONS

- Notebook PC
- If the usage of this product is not for PC application, but for others, please contact SEC

GENERAL INFORMATION

Item	Specification	Unit	Note
Display area	353.45 (H) x 198.72(V) (16.0” diagonal)	mm	
Driver element	a-Si TFT active matrix		
Display colors	262,144		
Number of pixel	1366 x 768	pixel	16 : 9
Pixel arrangement	RGB vertical stripe		
Pixel pitch	0.25875 (H) x 0.25875 (V) (TYP.)	mm	
Display Mode	Normally white		
Glass Thickness	0.5	mm	
Surface treatment	Haze 0, Hardness 3H		

Mechanical Information

Item		Min.	Typ.	Max.	Unit	Note
Module size	Horizontal (H)	364.5	365	365.5	mm	
	Vertical (V)	213.5	214	214.5	mm	
	Depth (D)	-	6.2	6.5	mm	(1)
Weight		-	530	545	g	

Note (1) Measurement condition of outline dimension
. Equipment : Vernier Calipers
. Push Force : 500g ·f (minimum)

1. ABSOLUTE MAXIMUM RATINGS

1.1 ENVIRONMENTAL ABSOLUTE RATINGS

Item	Symbol	Min.	Max.	Unit	Note
Storage temperate	TSTG	-20	60	°C	(1),(5)
Operating temperate (Temperature of glass surface)	TOPR	0	50	°C	(1),(5)
Shock (non-operating)	Snop	-	240	G	(2),(4)
Vibration (non-operating)	Vnop	-	2.41	G	(3),(4)

Note (1) Temperature and relative humidity range are shown in the figure below.
95 % RH Max. (40 °C ≥ Ta)
Maximum wet - bulb temperature at 39 ^{O}C or less. (Ta > 40 °C) No condensation

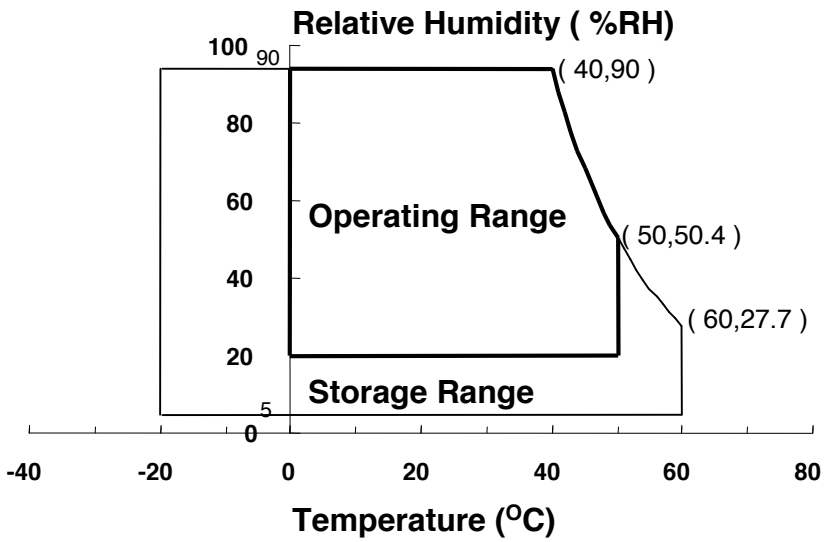

(2) 2ms, half sine wave, one time for ±X, ±Y, ± Z.
(3) 5 - 500 Hz, random vibration, 30min for X, Y, Z.
(4) At testing Vibration and Shock, the fixture in holding the Module to be tested have to be hard and rigid enough so that the Module would not be twisted or bent by the fixture.
(5) If product is used for extended time excessively or exposed to high temperatures for extended time, there is a possibility of wide viewing angle film damage which could affect visual characteristics.

1.2 ELECTRICAL ABSOLUTE RATINGS

(1) TFT LCD MODULE

V_{DD} =3.3V, V_{SS} = GND = 0V

Item	Symbol	Min.	Max.	Unit	Note
Power Supply Voltage	V_{DD}	V_{DD} - 0.3	V_{DD} + 0.3	V	(1)
Logic Input Voltage	V_{IN}	V_{DD} - 0.3	V_{DD} + 0.3	V	(1)

Note (1) Within Ta (25 ± 2 °C)

(2) BACK-LIGHT UNIT

Ta = 25 ± 2 °C

Item	Symbol	Min.	Max.	Unit	Note
Lamp Current	I_L	3.0	7.0	mArms	(1)
Lamp frequency	F_L	40	80	kHz	(1)

Note 1) Permanent damage to the device may occur if maximum values are exceeded
Functional operation should be restricted to the conditions described under normal operating conditions.

2. OPTICAL CHARACTERISTICS

The following items are measured under stable conditions. The optical characteristics should be measured in a dark room or equivalent state with the methods shown in Note (5).
Measuring equipment : TOPCON BM-5A and PR-650

* Ta = 25 ± 2 °C, V_{DD}=3.3V, fv= 60Hz, f_{DCLK} = 72.33MHz, I_L = 6.0 mA

Item		Symbol	Condition	Min.	Typ.	Max	Unit	Note
Contrast Ratio (5 Points)		CR	Normal Viewing Angle $\phi = 0$ $\theta = 0$	300	600	-	-	(1), (2), (5)
Response Time at Ta (Rising + Falling)		T_{RT}		-	8	16	msec	(1), (3)
Average Luminance of White (5 Points)		$Y_{L,AVE}$		190	220	-	cd/m^2	I_L=6.0mA (1), (4)
Color Chromaticity (CIE)	Red	R_X		0.585	0.615	0.645	-	(1), (5) PR-650
		R_Y		0.295	0.325	0.355		
	Green	G_X		0.270	0.300	0.330		
		G_Y		0.540	0.570	0.600		
	Blue	B_X		0.115	0.145	0.175		
		B_Y		0.050	0.080	0.110		
	White	W_X		0.283	0.313	0.343		
		W_Y		0.299	0.329	0.359		
Viewing Angle	Hor.	θ_L	CR ≥ 10	40	45	-	Degrees	(1), (5) BM-5A
		θ_H		40	45	-		
	Ver.	ϕ_H		10	15	-		
		ϕ_L		25	30	-		
	Hor.	θ_L	CR ≥ 100	20	25		Degrees	(1), (5) BM-5A
		θ_H		20	25			
	Ver.	ϕ_H		5	7			
		ϕ_L		5	10			
13 Points White Variation		δ_L		-	-	1.7	-	(6)

Note 1) Definition of Viewing Angle : Viewing angle range(10 ≤ C/R)

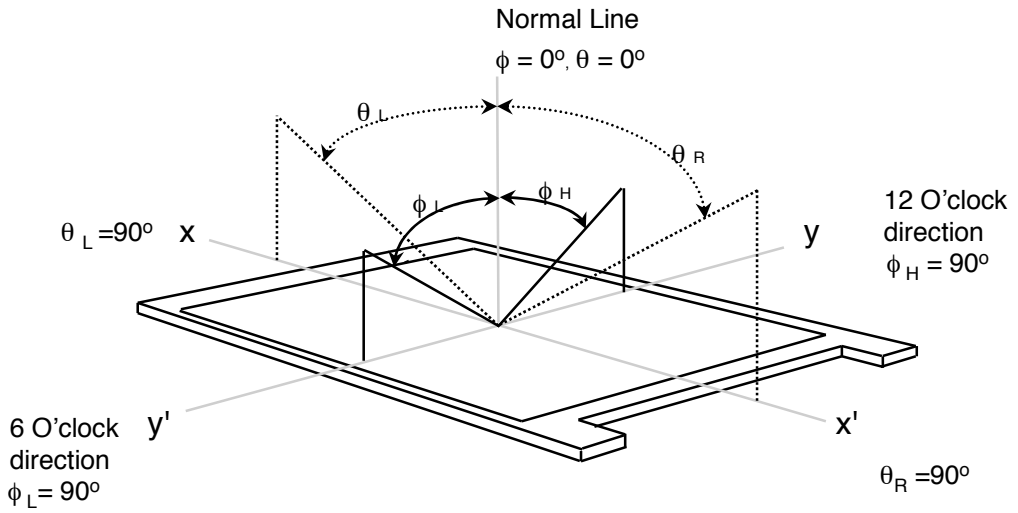

Note 2) Definition of Contrast Ratio (CR) : Ratio of gray max (Gmax) ,gray min (Gmin) at 5 points(4, 5, 7, 9, 10)

$$CR = \frac{CR(4) + CR(5) + CR(7) + CR(9) + CR(10)}{5}$$

Points : (4) , (5) , (7) , (9) , (10) at the figure of Note (6).

Note 3) Definition of Response time :

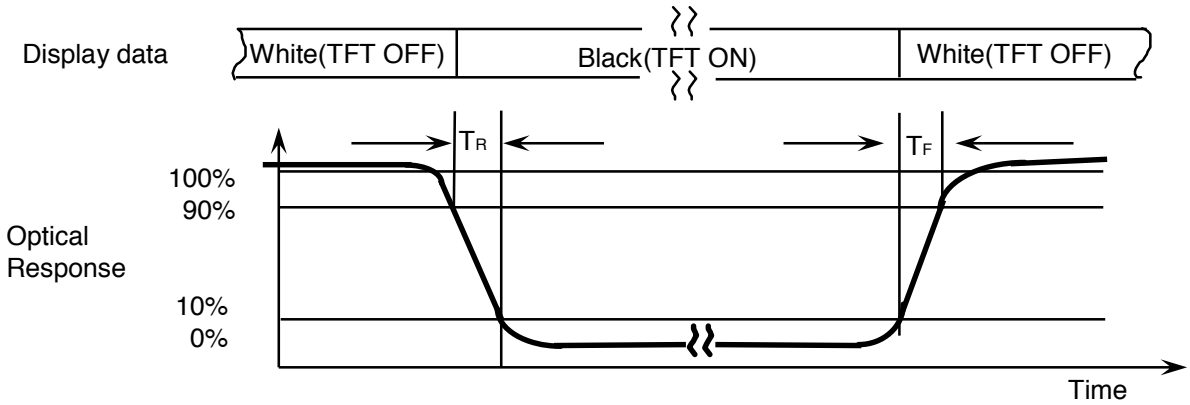

Note 4) Definition of Average Luminance of White : measure the luminance of white at 5 points.

Average Luminance of White ($Y_{L,AVE}$)

$$Y_{L,AVE} = \frac{Y_{L4} + Y_{L5} + Y_{L7} + Y_{L9} + Y_{L10}}{5}$$

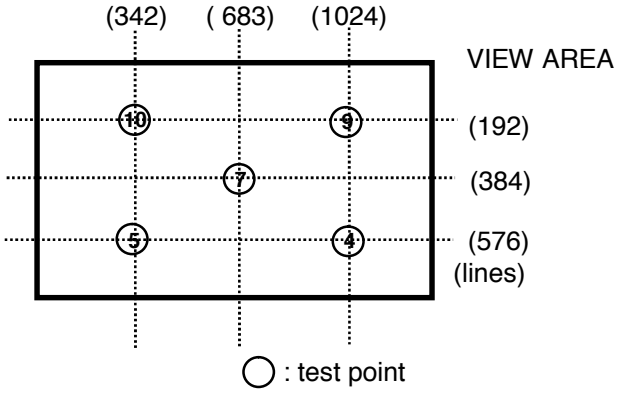

Samsung Secret

Note 5) After stabilizing and leaving the panel alone at a given temperature for 30 min , the measurement should be executed. Measurement should be executed in a stable, windless,and dark room.
30 min after lighting the backlight. This should be measured in the center of screen.
Lamp current : 6.0mA (Inverter : SIC-130T)
Environment condition : Ta = 25 ± 2 °C

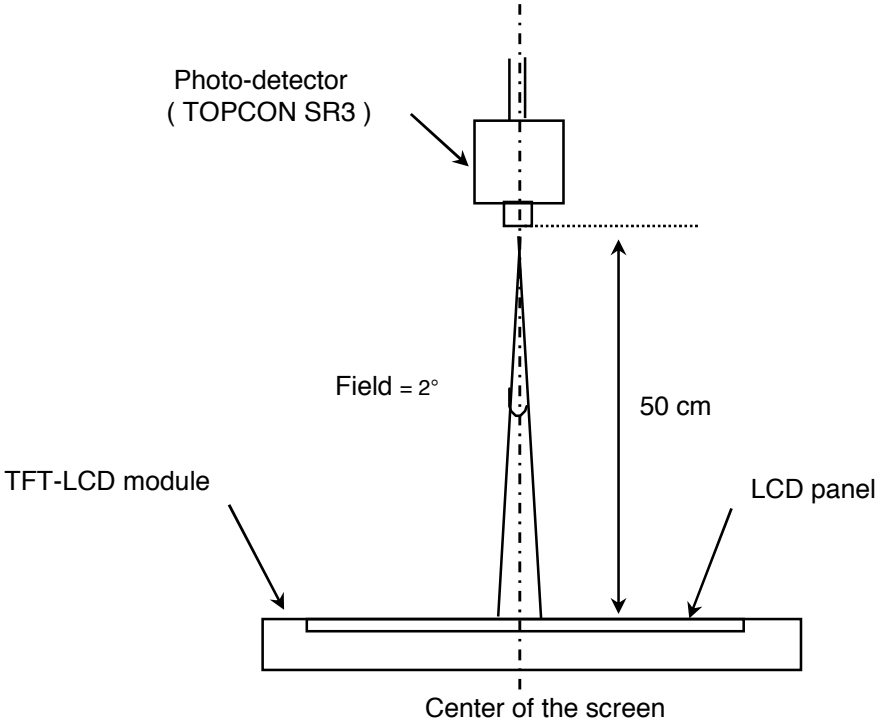

[Optical characteristics measurement setup]

Note 6) Definition of 13 points white variation (δ_L), CR variation(C_{VER}) [1 ~ 13]

$$\delta_L = \frac{\text{Maximum luminance of 13 points}}{\text{Minimum luminance of 13 points}}$$

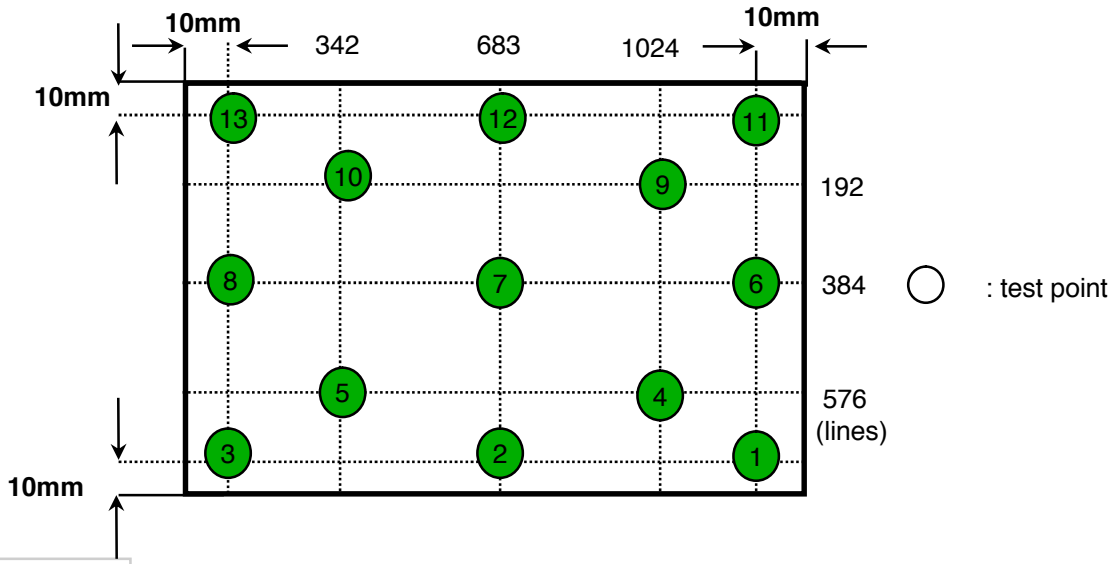

Samsung Secret

149911204085368

3. ELECTRICAL CHARACTERISTICS

Approval

3.1 TFT LCD MODULE

Ta= 25 ± 2°C

Item		Symbol	Min.	Typ.	Max.	Unit	Note
Voltage of Power Supply		V_{DD}	3.0	3.3	3.6	V	
Differential Input Voltage for LVDS Receiver Threshold	High	V_{IH}	-	-	+100	mV	V_{CM} = +1.2V
	Low	V_{IL}	-100	-	-	mV	
Vsync Frequency		fv	-	60	-	Hz	
Hsync Frequency		f_H	-	47.4	-	KHz	
Main Frequency		f_{DCLK}	70.9	72.33	73.7	MHz	
Rush Current		I_{RUSH}	-	-	2.0	A	(4)
Current of Power Supply	White	I_{DD}	-	410	-	mA	(2),(3)*a
	Mosaic		-	480	-	mA	(2),(3)*b
	V. stripe		-	600	650	mA	(2),(3)*c

Note (1) Display data pins and timing signal pins should be connected.(GND = 0V)

(2) f_V = 60Hz, f_{DCLK} = 72.33MHZ, V_{DD} = 3.3V , DC Current.

(3) Power dissipation pattern

*a) White Pattern

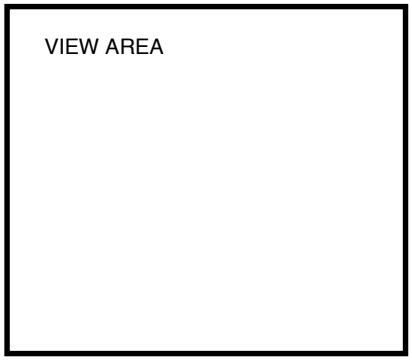

*b) Mosaic Pattern

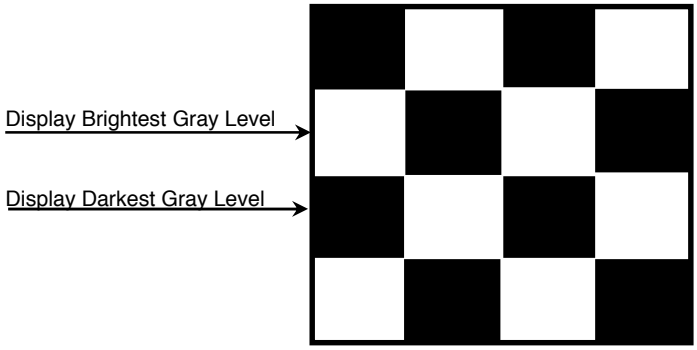

Samsung Secret

*c) 1dot Vertical stripe pattern

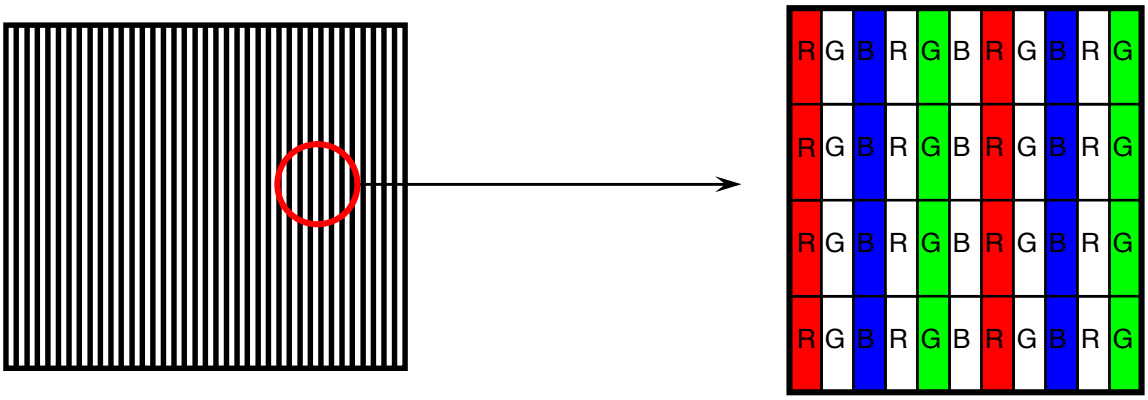

4) Rush current measurement condition

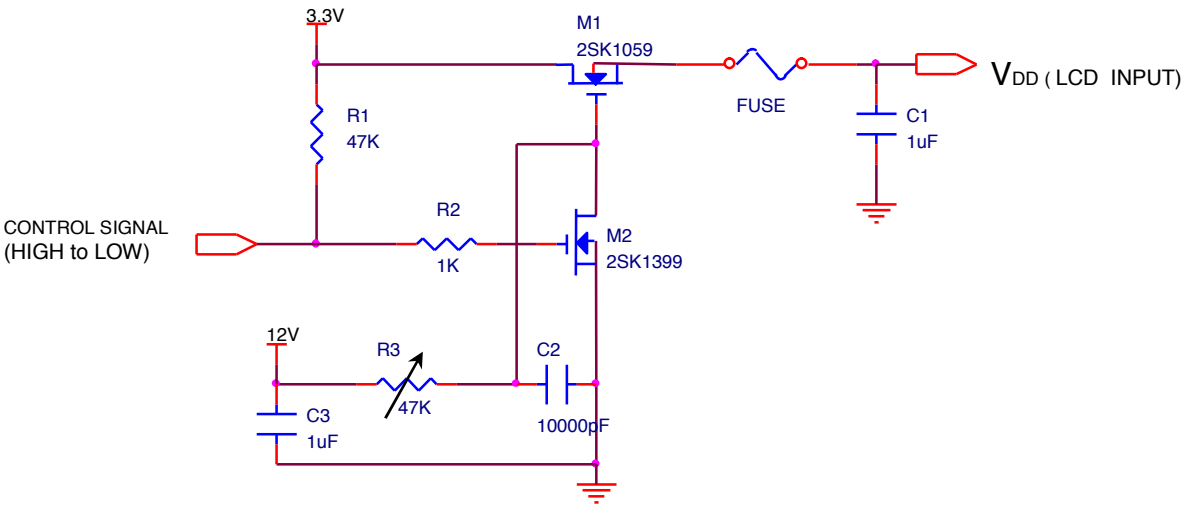

VDD rising time is 470us

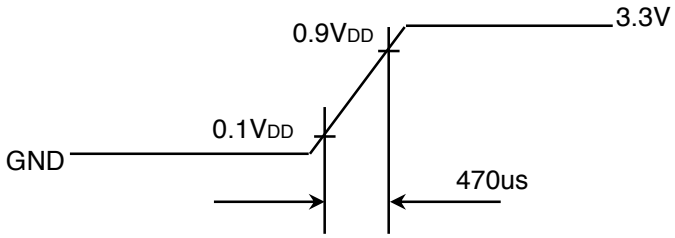

3.2 BACK-LIGHT UNIT

The backlight system is an edge-lighting type with a single CCFL (Cold Cathode Fluorescent Lamp).
The characteristics of a single lamp are shown in the following tables.

- INVERTER : SEM SIC 130T

Ta= 25 ± 2 °C

Item	Symbol	Min.	Typ.	Max.	Unit	Note
Lamp Current	I_L	3.0	6.0	6.5	mArms	(1)
Lamp Voltage	V_L	-	710	-	Vrms	I_L=6.0mA
Frequency	f_L	40	-	80	KHz	(2)
Power Consumption	P_L		4.5		W	(3) I_L=6.0mA
Operating Life Time	Hr	12,000			Hour	(4)
Startup Voltage	V_S	-	-	1,230	Vrms	25°C, (5)
				1,540	Vrms	0°C, (5)
Lamp startup time		-	-	1.0	sec	(5)

Note) The waveform of the inverter output voltage must be area symmetric and the design of the inverter must have specifications for the modularized lamp.

The performance of the backlight, for example life time or brightness, is much influenced by the characteristics of the DC-AC inverter for the lamp. So all the parameters of an inverter should be carefully designed so as not to produce too much leakage current from high-voltage output of the inverter.
When you design or order the inverter, please make sure that a poor lighting caused by the mismatch of the backlight and the inverter(miss lighting, flicker, etc.) never occur. When you confirm it, the module should be operated in the same condition as it is installed in your instrument.

Note (1) Lamp current is measured with a high frequency current meter as shown below.

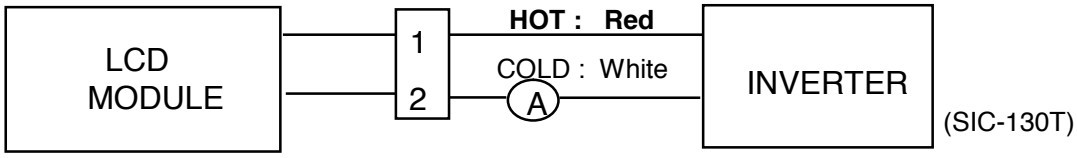

(2) Lamp frequency may produce interference with horizontal synchronous frequency and this may cause line flow on the display. Therefore lamp frequency should be detached from the horizontal synchronous frequency and its harmonics as far as possible in order to avoid interference.

(3) Refer to $I_L \times V_L$ to calculate.

(4) Life time (Hr) of a lamp can be defined as the time in which it continues to operate under the condition Ta= 25 ± 2 °C and I_L = 6.0 mArms until one of the following event occurs.

1. When the brightness becomes 50% or lower than the original.
2. When the Effective ignition length becomes 80% or lower than the original value.
   (Effective ignition length is defined as an area that has less than 70% brightness compared to the brightness in the center point.)

(5) The inverter open voltage - this voltage should be measured after ballast capacitor- have to be larger than the lamp startup voltage, otherwise backlight may has blinking for a moment after turns on or not be turned on.
If an inverter has shutdown function it should keep its open voltage for longer than 1 second even if lamp connector open.

Samsung Secret

149911204085368

Approval

4. BLOCK DIAGRAM

4.1 TFT LCD Module

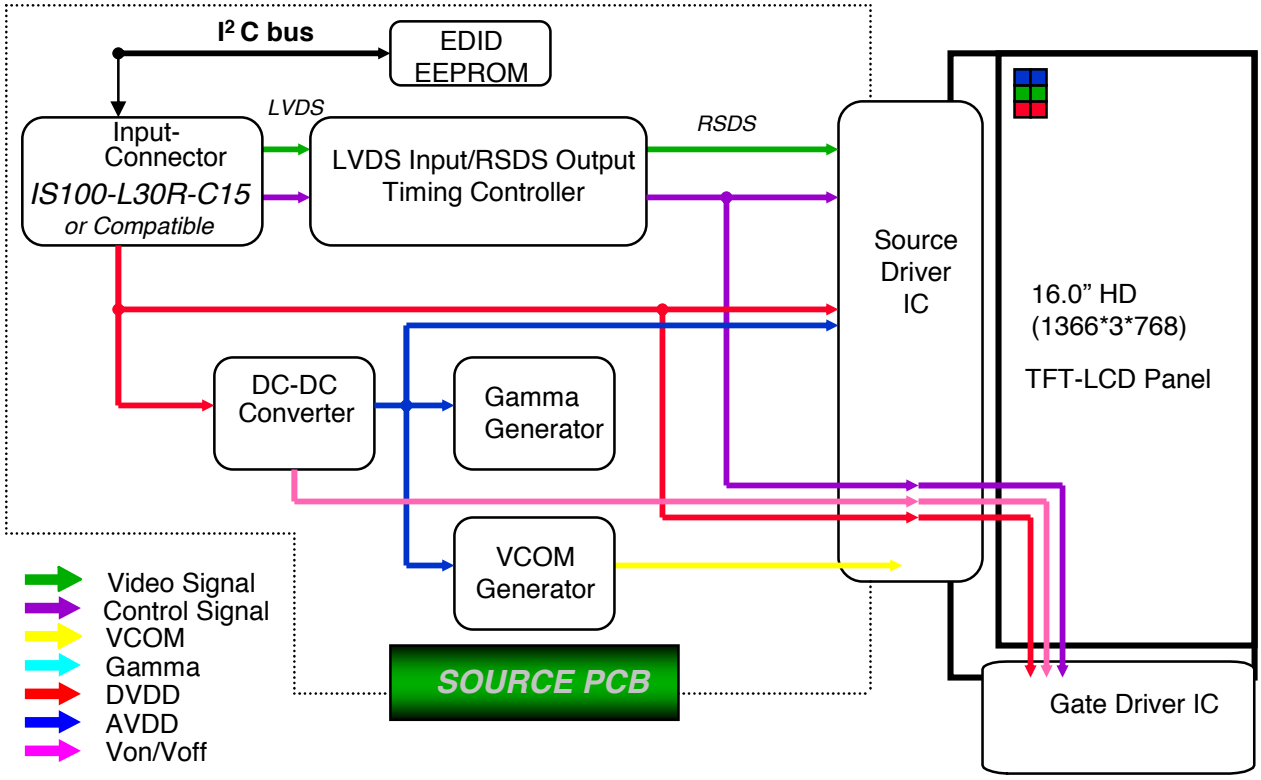

4.2 BACK-LIGHT UNIT

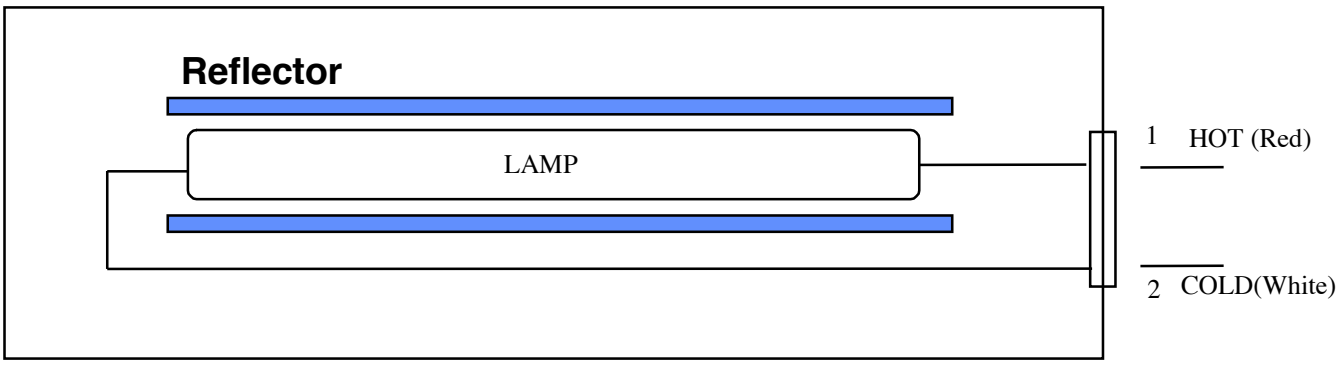

Note) The output of the inverter may change according to the material of the reflector.

Samsung Secret

149911204085368

5. INPUT TERMINAL PIN ASSIGNMENT

5.1. Input Signal & Power (LVDS, Connector : UJU IS100-L30R-C15 or compatible)
Mating Connector : JAE FI-X30M or compatible)

PIN NO	SYMBOL	FUNCTION	POLARITY	REMARK
1	VSS	Ground		
2	VDD	POWER SUPPLY +3.3V		
3	VDD	POWER SUPPLY +3.3V		
4	VEEDID	DDC 3.3V Power		
5	NC	No Connection		
6	CLKEDID	DDC Clock		
7	DATAEDID	DDC data		
8	RxIN0-	LVDS Differential Data INPUT (R0-R5,G0)	Negative	
9	RxIN0+	LVDS Differential Data INPUT (R0-R5,G0)	Positive	
10	VSS	Ground		
11	RxIN1-	LVDS Differential Data INPUT (G1-G5,B0-B1)	Negative	
12	RxIN1+	LVDS Differential Data INPUT (G1-G5,B0-B1)	Positive	
13	VSS	Ground		
14	RxIN2-	LVDS Differential Data INPUT (B2-B5,Sync,DE)	Negative	
15	RxIN2+	LVDS Differential Data INPUT (B2-B5,Sync,DE)	Positive	
16	VSS	Ground		
17	RxCLK-	LVDS Differential Data INPUT (Clock)	Negative	
18	RxCLK+	LVDS Differential Data INPUT (Clock)	Positive	
19	VSS	Ground		
20	NC	No Connection		
21	NC	No Connection		
22	VSS	GND		
23	NC	No Connection		
24	NC	No Connection		
25	VSS	GND		
26	NC	No Connection		
27	NC	No Connection		
28	VSS	GND		
29	NC	No Connection		
30	NC	No Connection		

5.2 LVDS Interface : Transmitter SN75LVDS86 or Compatible

Pin No.	Name	RGB Signal	Pin No.	Name	RGB Signal
44	TxIN0	R0	12	TxIN11	G5
45	TxIN1	R1	13	TxIN12	B0
47	TxIN2	R2	15	TxIN13	B1
48	TxIN3	R3	16	TxIN14	B2
1	TxIN4	R4	18	TxIN15	B3
3	TxIN5	R5	19	TxIN16	B4
4	TxIN6	G0	20	TxIN17	B5
6	TxIN7	G1	22	TxIN18	Hsync
7	TxIN8	G2	23	TxIN19	Vsync
9	TxIN9	G3	25	TxIN20	DE
10	TxIN10	G4	26	TxCLKIN	Clock

LVDS INTERFACE

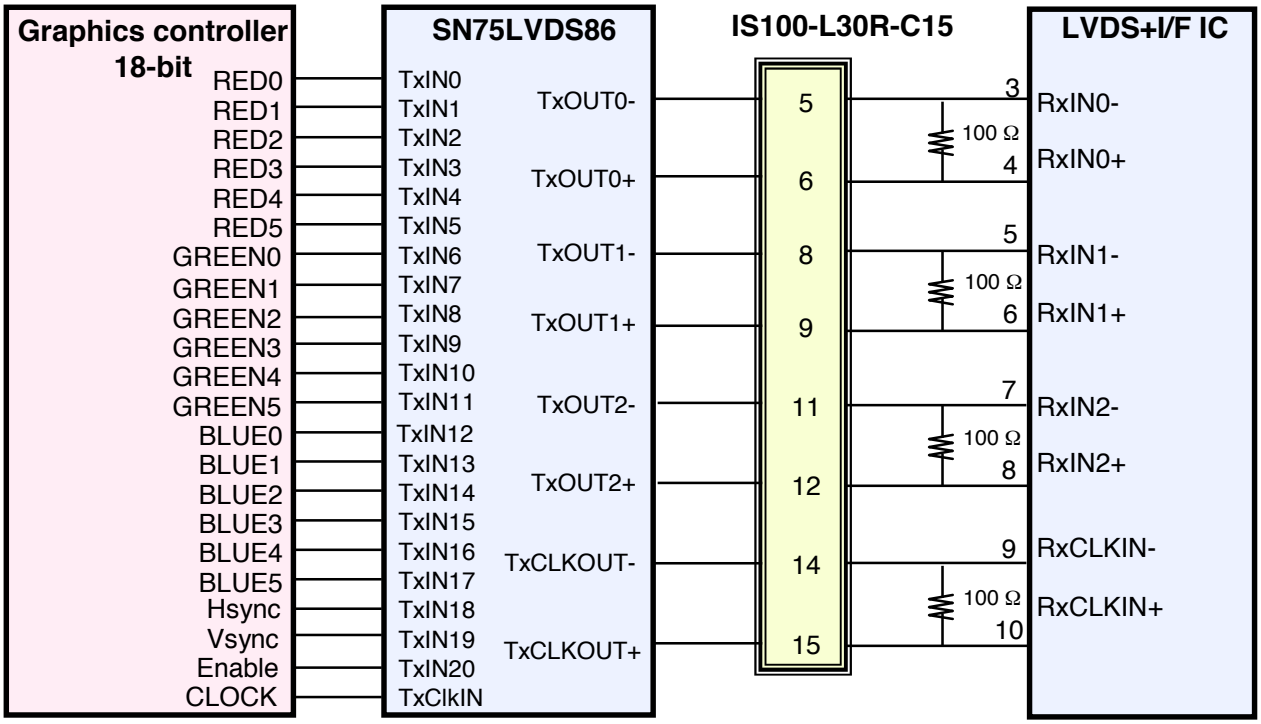

Note : The LCD Module uses a 100ohm resistor between positive and negative lines of each receiver input.

5.3 BACK LIGHT UNIT

Connector : JST BHSR - 02VS -1
Mating Connector : SM02B-BHSS-1(JST)

Pin NO.	Symbol	Color	Function
1	HOT	**Red**	High Voltage
2	COLD	**White**	Low Voltage

5.4 Timing Diagrams of LVDS For Transmission

LVDS Receiver : Integrated T-CON

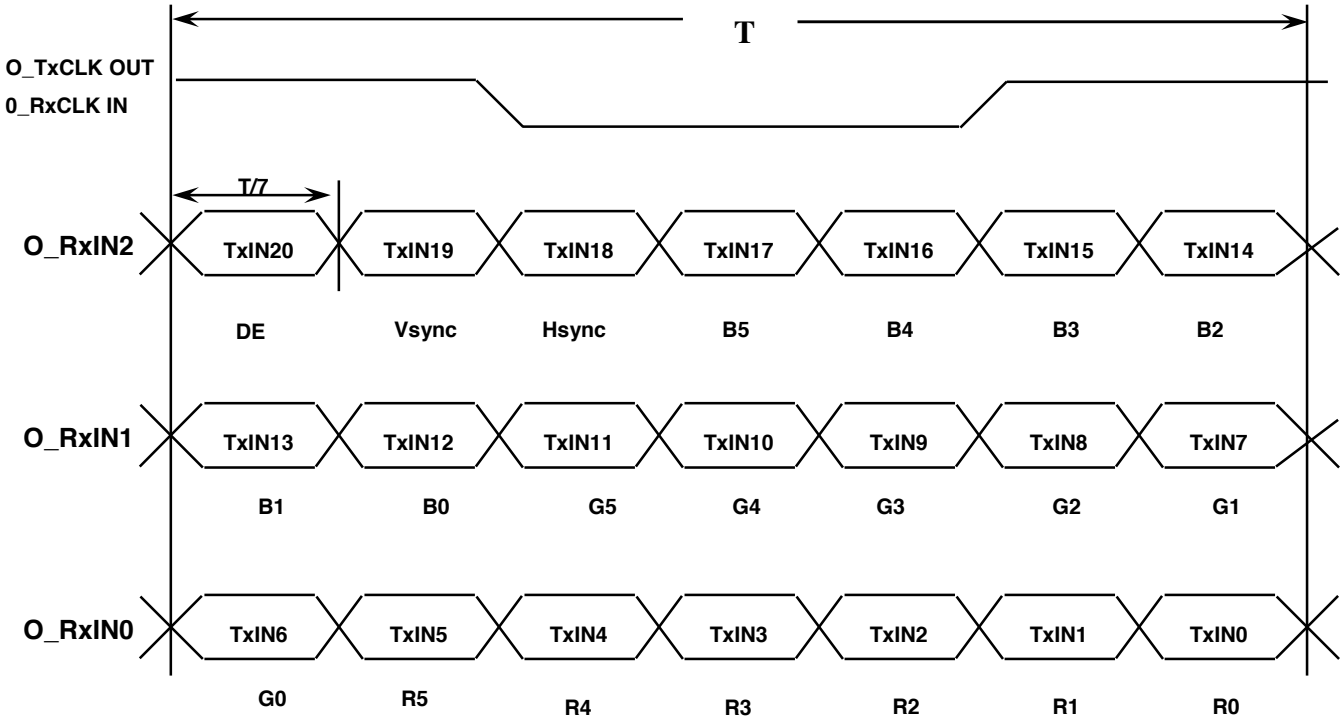

5.5 Input Signals, Basic Display Colors and Gray Scale of Each Color

Color	Display	Data Signal																		Gray Scale Level
		Red						Green						Blue						
		R0	R1	R2	R3	R4	R5	G0	G1	G2	G3	G4	G5	B0	B1	B2	B3	45	B5	
Basic Colors	Black	0	0	0	0	0	0	0	0	0	0	0	0	0	0	0	0	0	0	-
	Blue	0	0	0	0	0	0	0	0	0	0	0	0	1	1	1	1	1	1	-
	Green	0	0	0	0	0	0	1	1	1	1	1	1	0	0	0	0	0	0	-
	Cyan	0	0	0	0	0	0	1	1	1	1	1	1	1	1	1	1	1	1	-
	Red	1	1	1	1	1	1	0	0	0	0	0	0	0	0	0	0	0	0	-
	Magenta	1	1	1	1	1	1	0	0	0	0	0	0	1	1	1	1	1	1	-
	Yellow	1	1	1	1	1	1	1	1	1	1	1	1	0	0	0	0	0	0	-
	White	1	1	1	1	1	1	1	1	1	1	1	1	1	1	1	1	1	1	-
Gray Scale Of Red	Black	0	0	0	0	0	0	0	0	0	0	0	0	0	0	0	0	0	0	R0
	Dark	1	0	0	0	0	0	0	0	0	0	0	0	0	0	0	0	0	0	R1
	↑	0	1	0	0	0	0	0	0	0	0	0	0	0	0	0	0	0	0	R2
	:	:	:	:	:	:	:	:	:	:	:	:	:	:	:	:	:	:	:	R3~R60
	:	:	:	:	:	:	:	:	:	:	:	:	:	:	:	:	:	:	:	
	↓	1	0	1	1	1	1	0	0	0	0	0	0	0	0	0	0	0	0	R61
	Light	0	1	1	1	1	1	0	0	0	0	0	0	0	0	0	0	0	0	R62
	Red	1	1	1	1	1	1	0	0	0	0	0	0	0	0	0	0	0	0	R63
Gray Scale Of Green	Black	0	0	0	0	0	0	0	0	0	0	0	0	0	0	0	0	0	0	G0
	Dark	0	0	0	0	0	0	1	0	0	0	0	0	0	0	0	0	0	0	G1
	↑	0	0	0	0	0	0	0	1	0	0	0	0	0	0	0	0	0	0	G2
	:	:	:	:	:	:	:	:	:	:	:	:	:	:	:	:	:	:	:	G3~G60
	:	:	:	:	:	:	:	:	:	:	:	:	:	:	:	:	:	:	:	
	↓	0	0	0	0	0	0	1	0	1	1	1	1	0	0	0	0	0	0	G61
	Light	0	0	0	0	0	0	0	1	1	1	1	1	0	0	0	0	0	0	G62
	Green	0	0	0	0	0	0	1	1	1	1	1	1	0	0	0	0	0	0	G63
Gray Scale Of Blue	Black	0	0	0	0	0	0	0	0	0	0	0	0	0	0	0	0	0	0	B0
	Dark	0	0	0	0	0	0	0	0	0	0	0	0	1	0	0	0	0	0	B1
	↑	0	0	0	0	0	0	0	0	0	0	0	0	0	1	0	0	0	0	B2
	:	:	:	:	:	:	:	:	:	:	:	:	:	:	:	:	:	:	:	B3~B60
	:	:	:	:	:	:	:	:	:	:	:	:	:	:	:	:	:	:	:	
	↓	0	0	0	0	0	0	0	0	0	0	0	0	1	0	1	1	1	1	B61
	Light	0	0	0	0	0	0	0	0	0	0	0	0	0	1	1	1	1	1	B62
	Blue	0	0	0	0	0	0	0	0	0	0	0	0	1	1	1	1	1	1	B63

Note 1) Definition of gray :
Rn: Red gray, Gn: Green gray, Bn: Blue gray (n=gray level)
Note 2)Input signal: 0 =Low level voltage, 1=High level voltage

Samsung Secret

149911204085368

Approval

5.6 Pixel Format in the display

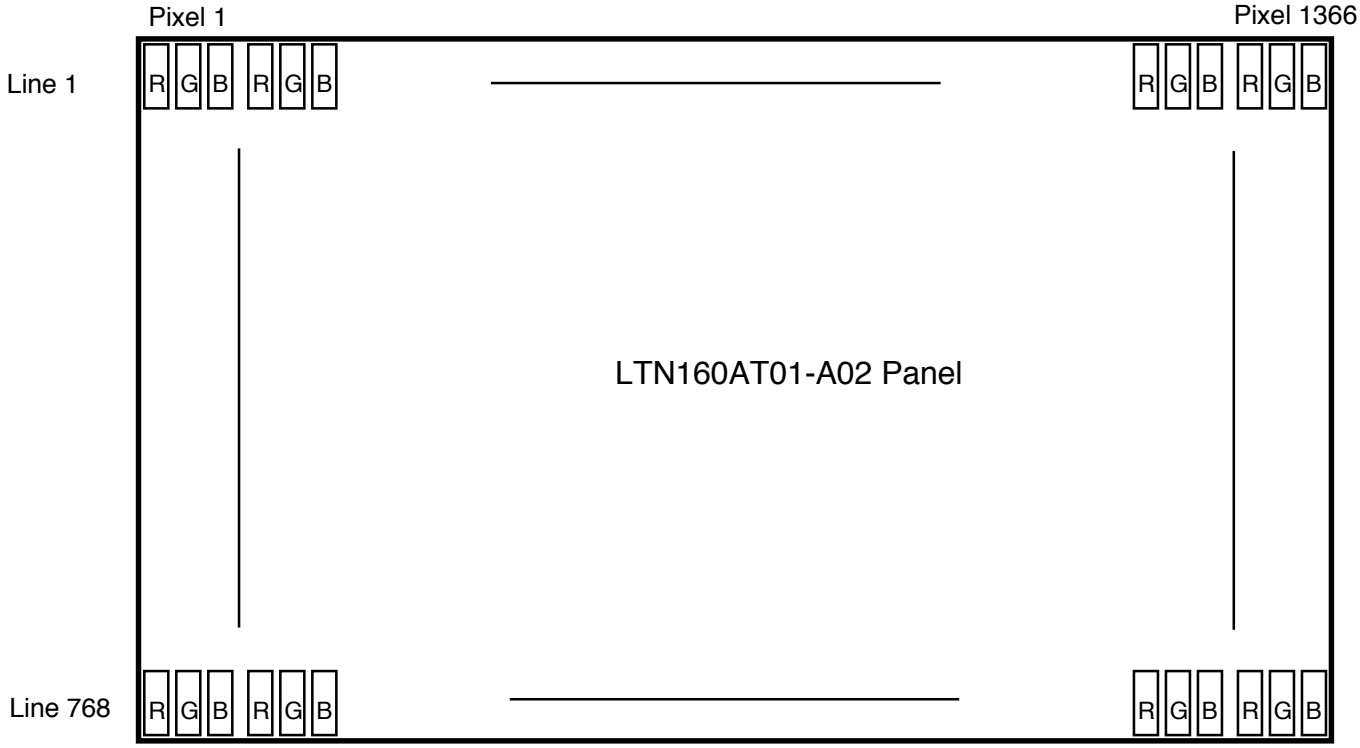

Samsung Secret

6. INTERFACE TIMING

6.1 Timing Parameters

Signal	Item	Symbol	Min.	Typ.	Max.	Unit	Note
Vertical Total	Cycle	TV	**772**	**790**	**974**	Lines	
Vertical Active Display Term	Display Period	TVD	-	**768**	-	Lines	
One Line Scanning Time	Cycle	TH	**1436**	**1526**	**1550**	Clocks	
Horizontal Active Display Term	Display Period	THD	-	**1366**	-	Clocks	

6.2 Timing diagrams of interface signal

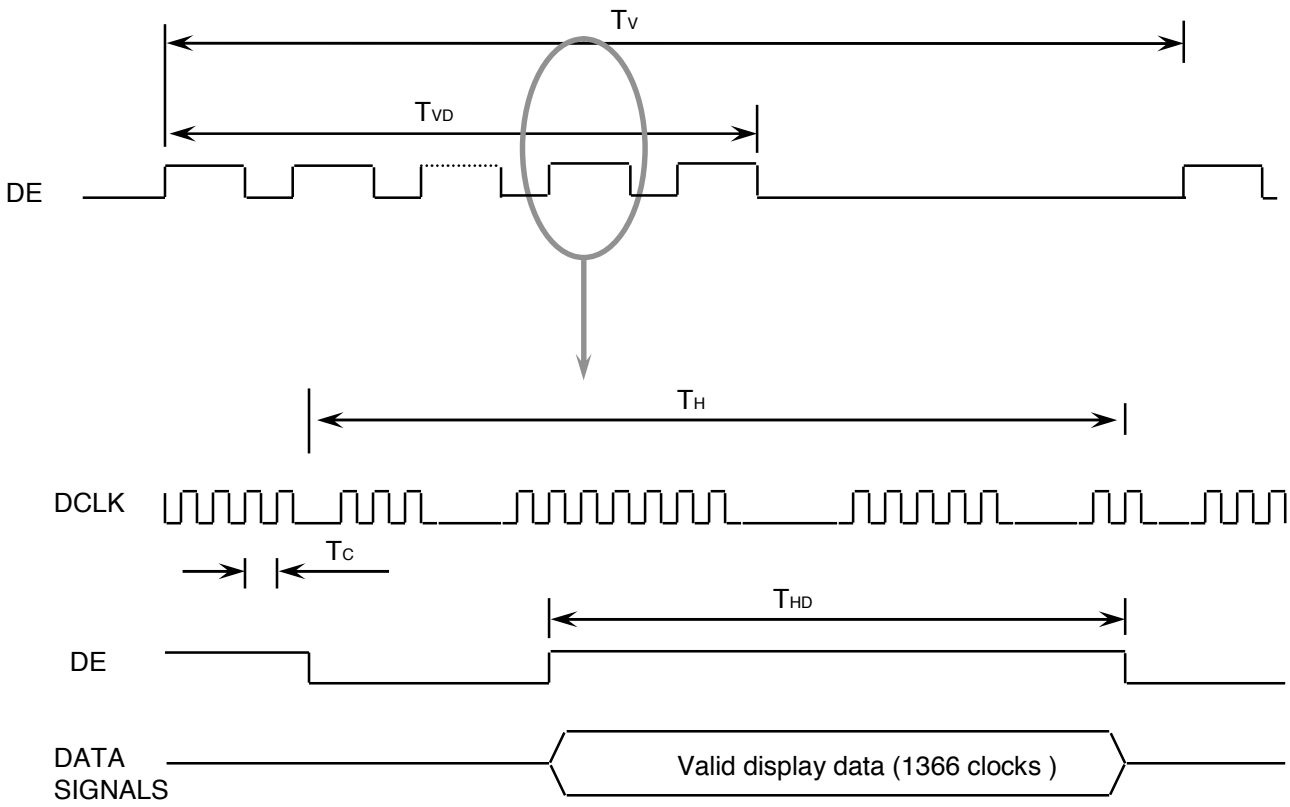

6.3 Power ON/OFF Sequence

: To prevent a latch-up or DC operation of the LCD module, the power on/off sequence should be as the diagram below.

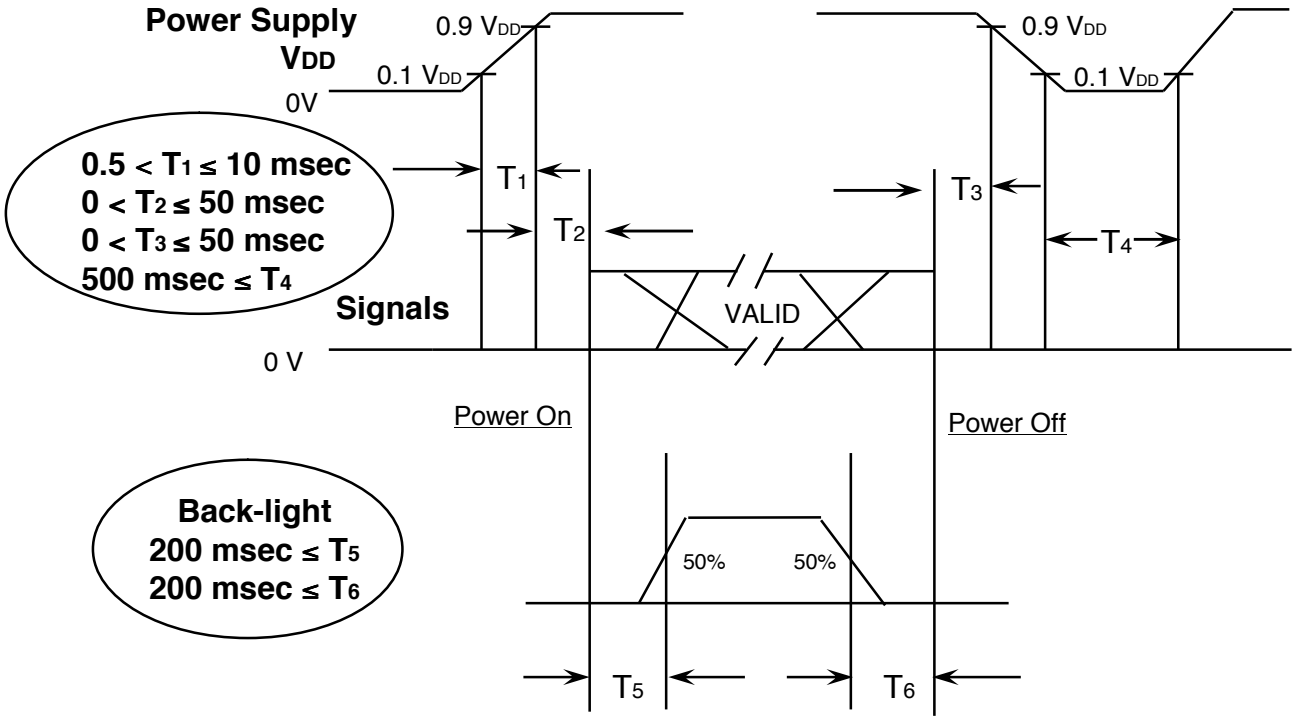

Power ON/OFF Sequence

T1 : Vdd rising time from 10% to 90%
T2 : The time from Vdd to valid data at power ON.
T3 : The time from valid data off to Vdd off at power Off.
T4 : Vdd off time for Windows restart
T5 : The time from valid data to B/L enable at power ON.
T6 : The time from valid data off to B/L disable at power Off.

NOTE.

(1) The supply voltage of the external system for the module input should be the same as the definition of V_{DD}.

(2) Apply the lamp voltage within the LCD operation range. When the back-light turns on before the LCD operation or the LCD turns off before the back-light turns off, the display may momentarily become white.

(3) In case of V_{DD} = off level, please keep the level of input signals on the low or keep a high impedance.

(4) T4 should be measured after the module has been fully discharged between power off and on period.

(5) Interface signal shall not be kept at high impedance when the power is on.

7. Mechanical Outline Dimension

Approval

[Refer to the next page]

Samsung Secret

149911204085368

FILE NO.

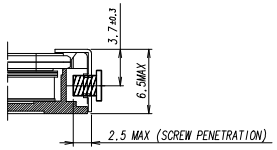

SECTION A-A'

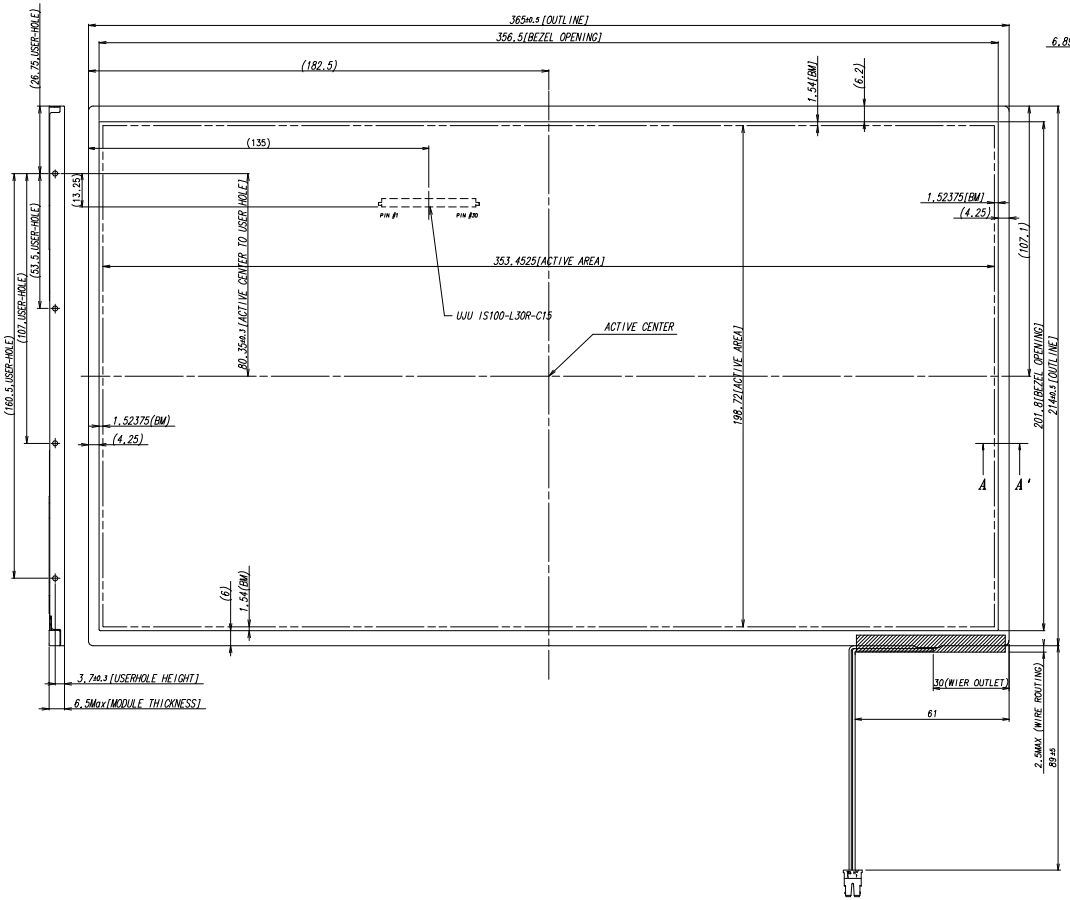

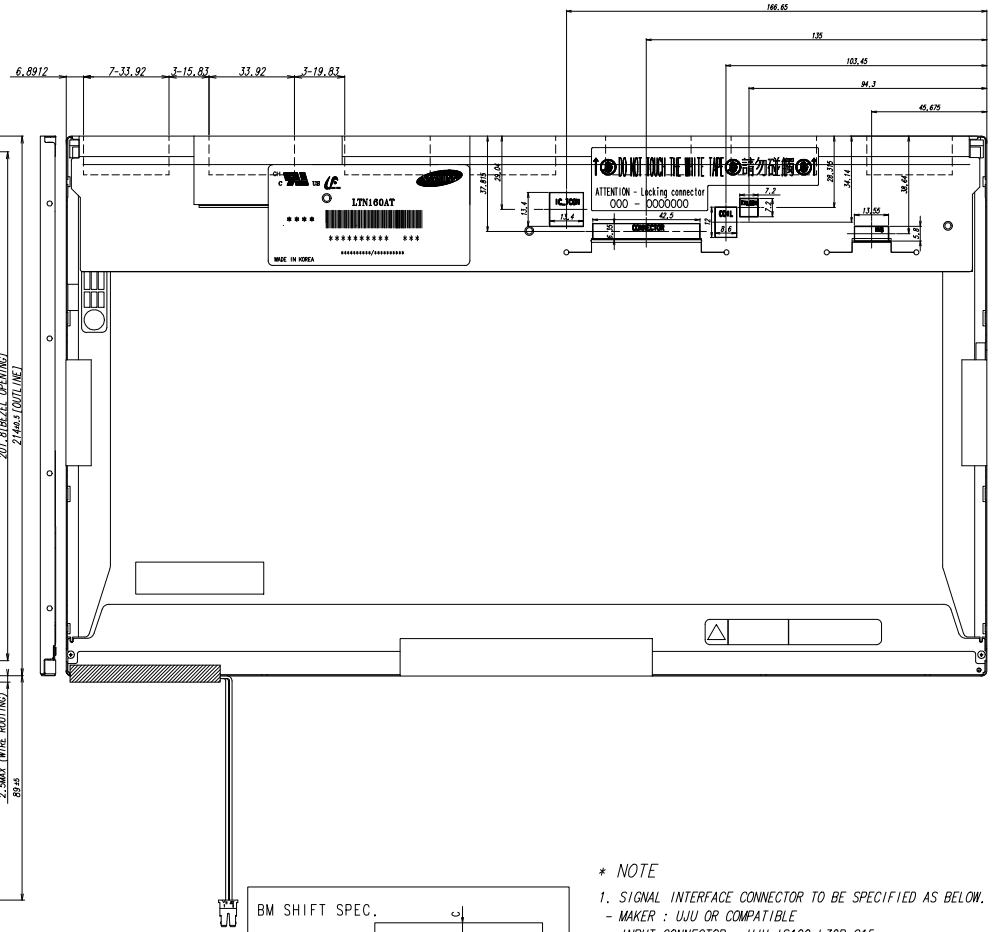

BM SHIFT SPEC.

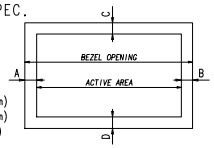

|A-B| < 1.0 (mm)
|C-D| < 1.0 (mm)
|BM| ≥ 1.0 (mm)

* NOTE

1. SIGNAL INTERFACE CONNECTOR TO BE SPECIFIED AS BELOW.
   - MAKER : UJU OR COMPATIBLE
   - INPUT CONNECTOR : UJU IS100-L30R-C15
2. CCFT CONNECTOR FOR BACKLIGHT TO BE SPECIFIED AS BELOW.
   - MAKER : JST
   - PART NO : BHSR-02VS-1
3. ALLOWED DEPTH OF USERHOLE SCREW INSERTION IS MAX 2.5mm
4. TORQUE SPEC : MAX 2.5 Kgf-cm
5. GENERAL TOLERANCE ± 0.5

GENERAL TOLERANCE			
STEP	LEVEL 1	LEVEL 2	LEVEL 3
0 < X ≤ 4	±0.05	±0.1	±0.2
4 < X ≤ 16	±0.08	±0.15	±0.3
16 < X ≤ 64	±0.12	±0.25	±0.5
64 < X ≤ 256	±0.25	±0.4	±0.8

REV	DATE	DESCRIPTION OF REVISION				REASON	CHG'D BY
UNIT	mm	DRA'N BY	DES'D BY	CHK'D BY	APP'D BY		
SCALE	1/1		H.H.KIM			MODEL NAME	LTN160AT01-A01
TOLERANCE LEVEL3		. .	2008.01.24			PART/SHEET NAME	OUTLINE DIMENSION
SAMSUNG ELECTRONICS					SPEC. NO	CODE NO.	

SHEET 1/1 VER. 000

REVISION

007051201242773

8. PACKING

Approval

1. CARTON(Internal Package)

(1) Packing Form
Corrugated Cardboard box and Corrupad form as shock absorber

(2) Packing Method

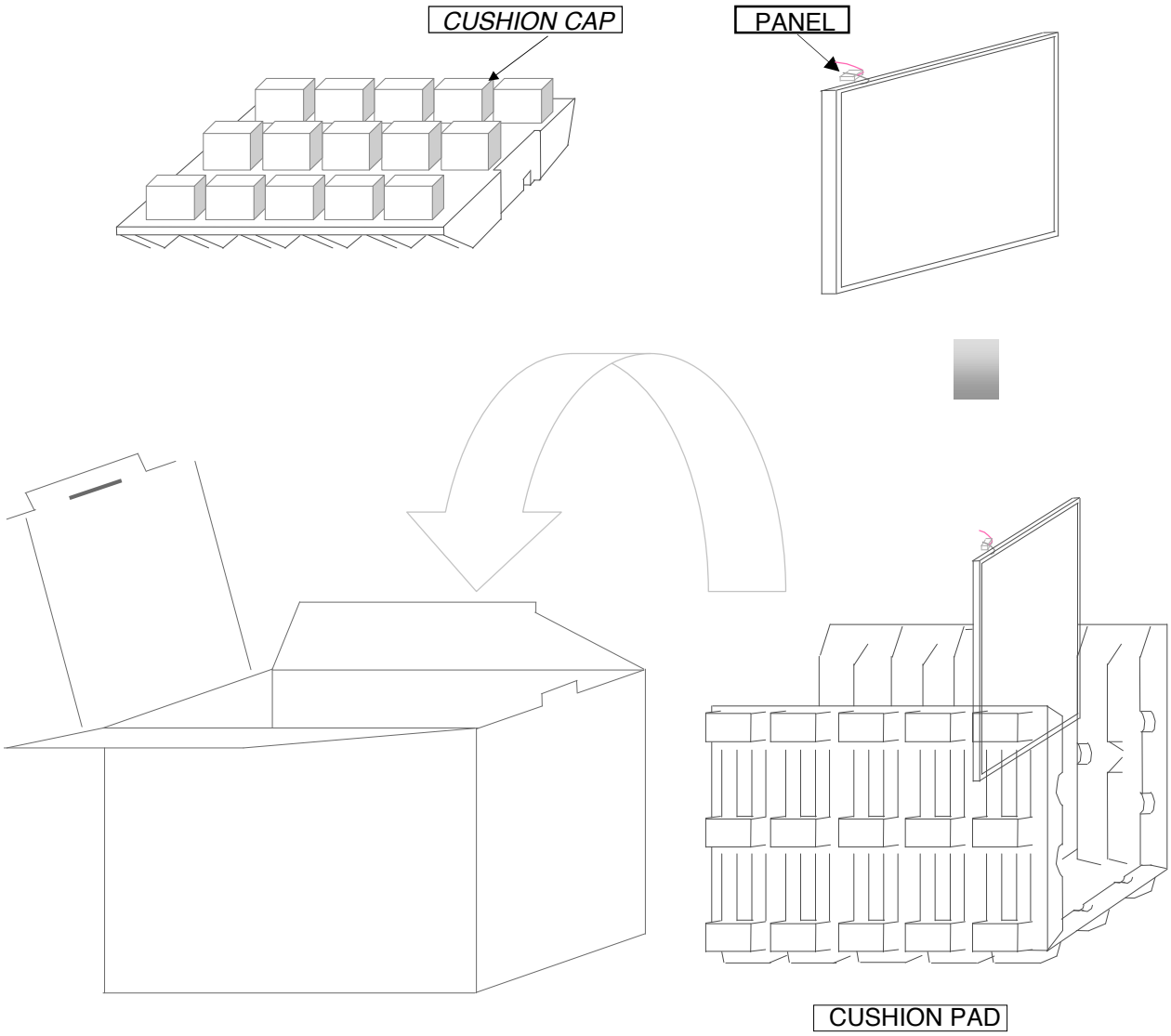

Note 1)Total Weight : Approximately 7 kg
2) Acceptance number of piling : 10 sets
3) Carton size :463(W) x 359(D) x 333 (H)

PACKING CASE

Samsung Secret

(3)Packing Material

No	Part name	Quantity
1	Static electric protective sack	10 pcs
2	Packing case (Inner box) included shock absorber	1 set
3	Pictorial marking	2 pcs
4	Carton	1 set

9. MARKINGS & OTHERS

A nameplate bearing followed by is affixed to a shipped product at the specified location on each product.

(1)Parts number : LTN160AT01
(2)Revision code : 3 letters
(3)Lot number : X X X X XX XX XX A02

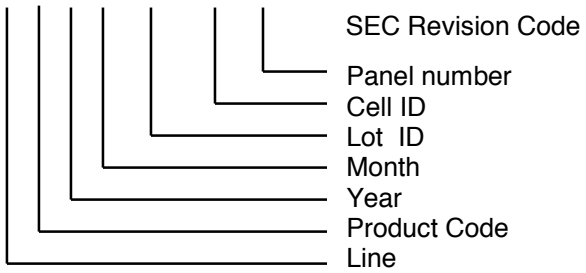

(4) Nameplate Indication

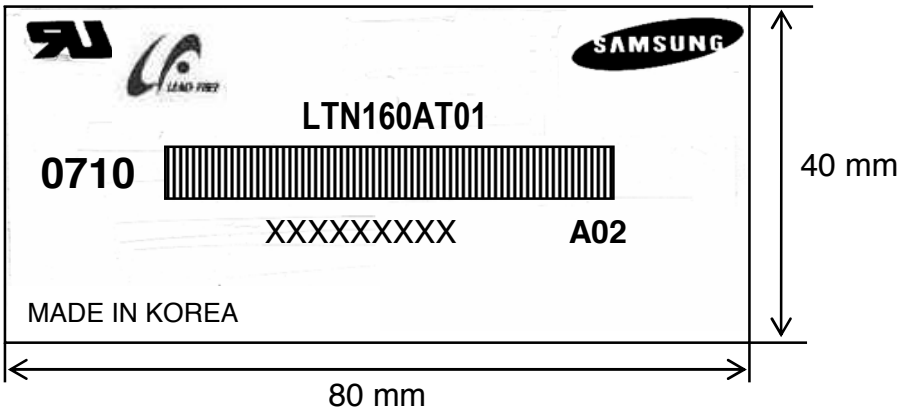

Parts name : LTN160AT01
Lot number : XXXXXXXXXX
Inspected work week : 0710(2007 year 10th week)
Product Revision Code : A02

High voltage caution label

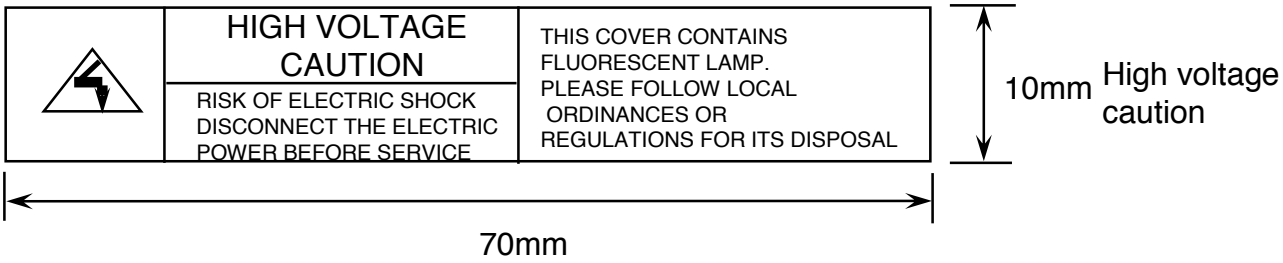

(6) Packing small box attach

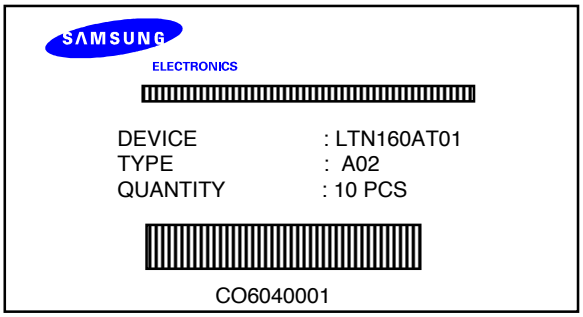

(7) Packing box Marking : Samsung TFT-LCD Brand Name

10. GENERAL PRECAUTIONS

1. Handling

(a) When the module is assembled, It should be attached to the system firmly using every mounting holes. Be careful not to twist and bend the modules.

(b) Refrain from strong mechanical shock and / or any force to the module. In addition to damage, this may cause improper operation or damage to the module and CCFT backlight.

(c) Note that polarizers are very fragile and could be easily damaged. Do not press or scratch the surface harder than a HB pencil lead.

(d) Wipe off water droplets or oil immediately. If you leave the droplets for a long time, Staining and discoloration may occur.

(e) If the surface of the polarizer is dirty, clean it using some absorbent cotton or soft cloth.

(f) The desirable cleaners are water, IPA(Isoprophyl Alcohol) or Hexane.
Do not use Ketone type materials(ex. Acetone), Ethyl alcohol, Toluene, Ethyl acid or Methyl chloride. It might permanent damage to the polarizer due to chemical reaction.

(g) If the liquid crystal material leaks from the panel, it should be kept away from the eyes or mouth . In case of contact with hands, legs or clothes, it must be washed away thoroughly with soap.

(h) Protect the module from static , it may cause damage to the C-MOS Gate Array IC.

(i) Use fingerstalls with soft gloves in order to keep display clean during the incoming inspection and assembly process.

(j) Do not disassemble the module.

(k) Do not pull or fold the lamp wire.

(l) Do not adjust the variable resistor which is located on the back side.

(m) Protection film for polarizer on the module shall be slowly peeled off just before use so that the electrostatic charge can be minimized.

(n) Pins of I/F connector shall not be touched directly with bare hands.

2. STORAGE

(a) Do not leave the module in high temperature, and high humidity for a long time. It is highly recommended to store the module with temperature from 0 to 35 °C and relative humidity of less than 70%.

(b) Do not store the TFT-LCD module in direct sunlight.

(c) The module shall be stored in a dark place. It is prohibited to apply sunlight or fluorescent light during the store.

3. OPERATION

(a) Do not connect,disconnect the module in the " Power On" condition.

(b) Power supply should always be turned on/off by following item 6.3 " Power on/off sequence ".

(c) Module has high frequency circuits. Sufficient suppression to the electromagnetic interference shall be done by system manufacturers. Grounding and shielding methods may be important to minimize the interference.

(d) The cable between the backlight connector and its inverter power supply shall be a minimized length and be connected directly . The longer cable between the backlight and the inverter may cause lower luminance of lamp(CCFT) and may require higher startup voltage(Vs).

(e) The standard limited warranty is only applicable when the module is used for general notebook applications. If used for purposes other than as specified, SEC is not to be held reliable for the defective operations. It is strongly recommended to contact SEC to find out fitness for a particular purpose.

4. OTHERS

(a) Ultra-violet ray filter is necessary for outdoor operation.

(b) Avoid condensation of water. It may result in improper operation or disconnection of electrode.

(c) Do not exceed the absolute maximum rating value. (the supply voltage variation, input voltage variation, variation in part contents and environmental temperature, so on) Otherwise the module may be damaged.

(d) If the module displays the same pattern continuously for a long period of time,it can be the situation when the image "sticks" to the screen.

(e) This module has its circuitry PCB's on the rear side and should be handled carefully in order not to be stressed.

11. EDID

Approval

Address (HEX)	FUNCTION	Value HEX	BIN	DEC	ASCII or Data	Notes
00	Header	00	00000000	0		EDID Header
01		FF	11111111	255		
02		FF	11111111	255		
03		FF	11111111	255		
04		FF	11111111	255		
05		FF	11111111	255		
06		FF	11111111	255		
07		00	00000000	0		
08	ID Manufacturer Name	4C	01001100	76	S	3 character ID
					E	
09		A3	10100011	163	C	"SEC"
0A	ID Product Code	4C	01001100	76	[L]	
0B		30	00110000	48	[0]	
0C	32-bit serial no.	00	00000000	0		
0D		00	00000000	0		
0E		00	00000000	0		
0F		00	00000000	0		
10	Week of manufacture	00	00000000	0		
11	Year of manufacture	12	00010010	18	2008	2008
12	EDID Structure Ver.	01	00000001	1	1	EDID Ver. 1.0
13	EDID revision #	03	00000011	3	3	EDID Rev. 3
14	Video input definition	80	10000000	128		
15	Max H image size	23	00100011	35	35	35 cm(approx)
16	Max V image size	14	00010100	20	20	20 cm(approx)
17	Display Gamma	78	01111000	120	2.2	Gamma 2.2
18	Feature support	0A	00001010	10		
19	Red/green low bits	87	10000111	135		10000111
1A	Blue/white low bits	F5	11110101	245		11111110
1B	Red x/ high bits	94	10010100	148	0.580	Red x 0.580= 1001010010
1C	Red y	57	01010111	87	0.340	Red y 0.340= 0101011100
1D	Green x	4F	01001111	79	0.310	Green x 0.310= 0100111101
1E	Green y	8C	10001100	140	0.550	Green y 0.550= 1000110011
1F	Blue x	27	00100111	39	0.155	Blue x 0.155= 001001111
20	Blue y	27	00100111	39	0.155	Blue y 0.155= 001001111
21	White x	50	01010000	80	0.313	White x 0.313= 0101000001
22	White y	54	01010100	84	0.329	White y 0.329= 0101010001
23	Established timing 1	00	00000000	0		
24	Established timing 2	00	00000000	0		
25	Established timing 3	00	00000000	0		

26	Standard timing #1	01	00000001	1		not used
27		01	00000001	1		
28	Standard timing #2	01	00000001	1		not used
29		01	00000001	1		
2A	Standard timing #3	01	00000001	1		not used
2B		01	00000001	1		
2C	Standard timing #4	01	00000001	1		not used
2D		01	00000001	1		
2E	Standard timing #5	01	00000001	1		not used
2F		01	00000001	1		
30	Standard timing #6	01	00000001	1		not used
31		01	00000001	1		
32	Standard timing #7	01	00000001	1		not used
33		01	00000001	1		
34	Standard timing #8	01	00000001	1		not used
35		01	00000001	1		
36	Detailed timing/monitor descriptor #1	41	01000001	65	72.33	Main clock= 72.33 MHz
37		1C	00011100	28		
38		56	01010110	86	1366	Hor active=1366 pixels
39		A0	10100000	160	160	Hor blanking=160 pixels
3A		50	01010000	80		4bit : 4bit
3B		00	00000000	0	768	Vertcal active=768 lines
3C		16	00010110	22	22	Vertical blanking=22 lines
3D		30	00110000	48		4bit : 4bit
3E		30	00110000	48	48	
3F		20	00100000	32	32	H sync. Width=32 pixels
40		25	00100101	37	2 5	V sync. Offset=2 lines V sync. Width=5 lines
41		00	00000000	0		2bit : 2bit :2bit :2bit
42		61	01100001	97	353	H image size= 353 mm(approx)
43		C6	11000110	198	198	V image size = 198 mm(approx)
44		10	00010000	16		
45		00	00000000	0		No Horizontal Border
46		00	00000000	0		No Vertical Border
47		19	00011001	25		
48	Detailed timing/monitor descriptor #2	00	00000000	0		Manufacturer Specified (Timing)
49		00	00000000	0		
4A		00	00000000	0		
4B		0F	00001111	15		
4C		00	00000000	0		
4D		00	00000000	0		**Value**=HSPWmin / 2
4E		00	00000000	0		**Value**=HSPWmax / 2
4F		00	00000000	0		**Value**=Thbpmin /2
50		00	00000000	0		**Value**=Thbpmax /2
51		00	00000000	0		**Value**=VSPWmin /2
52		00	00000000	0		**Value**=VSPWmax /2
53		00	00000000	0		**Value**=Tvbpmin / 2
54		00	00000000	0		**Value**=Tvbpmax / 2
55		1E	00011110	30		Thpmin=**value***2 + HA pixelclks
56		B4	10110100	180		Thpmax=**value***2 + HA pixelclks
57		02	00000010	2		Tvpmin=**value***2 + VA lines
58		74	01110100	116		Tvpmax=**value***2 + VA lines
59		00	00000000	0		Module revision

5A		00	00000000	0		ASCII Data String Tag
5B		00	00000000	0		
5C		00	00000000	0		
5D		FE	11111110	254		
5E		00	00000000	0		
5F		53	01010011	83	[S]	
60		41	01000001	65	[A]	
61	Detailed timing/monitor	4D	01001101	77	[M]	
62	descriptor #3	53	01010011	83	[S]	
63		55	01010101	85	[U]	
64		4E	01001110	78	[N]	
65		47	01000111	71	[G]	
66		0A	00001010	10	[^]	
67		20	00100000	32	[ ]	
68		20	00100000	32	[ ]	
69		20	00100000	32	[ ]	
6A		20	00100000	32	[ ]	
6B		20	00100000	32	[ ]	
6C		00	00000000	0		Monitor Name Tag (ASCII)
6D		00	00000000	0		
6E		00	00000000	0		
6F		FE	11111110	254		
70		00	00000000	0		
71		31	00110001	49	[1]	
72		36	00110110	54	[6]	
73	Detailed timing/monitor	30	00110000	48	[0]	
74	descriptor #4	41	01000001	65	[A]	
75		54	01010100	84	[T]	
76		30	00110000	48	[0]	
77		31	00110001	49	[1]	
78		2D	00101101	45	[-]	
79		41	01000001	65	[A]	
7A		30	00110000	48	[0]	
7B		32	00110010	50	[2]	
7C		0A	00001010	10	[^]	
7D		20	00100000	32	[ ]	
7E	Extension Flag	00	00000000	0		
7F	Checksum	**B8**	10111000	**184**		