SAMSUNG ELECTRONICS

Approval

TO : Lenovo

DATE : Sep. 12th, 2008

SAMSUNG TFT-LCD

MODEL NO.:LTN154AT13-L02

NOTE : Surface type [**Anti Glare**]
Green product (Complied with RoHS requirement)

APPROVED BY : K. H. Shin

PREPARED BY : **Mobile Division, Application Engineering Part**

SAMSUNG ELECTRONICS CO., LTD.

wise view™

SEC Secret

김진희0304463112925088 20080912120439

Approval

CONTENTS

Revision History ---------- (3)

General Description ---------- (5)

1. Absolute Maximum Ratings ---------- (6)
   1.1 Absolute Ratings of environment
   1.2 Electrical Absolute Ratings

2. Optical Characteristics ---------- (8)

3. Electrical Characteristics ---------- (12)
   3.1 TFT LCD Module
   3.2 Backlight Unit

4. Block Diagram ---------- (15)
   4.1 TFT LCD Module
   4.2 Backlight Unit

5. Input Terminal Pin Assignment ---------- (16)
   5.1 Input Signal & Power
   5.2 LVDS Interface
   5.3 Backlight Unit
   5.4 Timing Diagrams of LVDS For Transmitting
   5.5 Input Signals, Basic Display Colors and Gray Scale of Each Color.
   5.6 Pixel format

6. Interface Timing ---------- (21)
   6.1 Timing Parameters(DE Mode)
   6.2 Timing Diagrams of interface Signal (DE Mode)
   6.3 Power ON/OFF Sequence

7. Outline Dimension ---------- (23)

8. Product Markings and Others ---------- (25)

9. General Precautions ---------- (26)

10. EDID ---------- (28)

김진희0304463112925088 20080912120439

REVISION HISTORY

Approval

Date	Revision No.	Page	Summary
Aug. 26, 2006	P00	All	- LTN154AT13-L02 model specification was First issued. ● SEC's P/N LTN154AT13-L02 ● Lenovo's product code Lenovo P/N : 42T0588 FRU P/N : 42T0589 EC NO : - Header Code : 1ZF0P
Aug. 28, 2008	A00	All	-LTN154AT13-L02 approval specification was issued first. ●SEC's P/N LTN154AT13-L02 ● Lenovo's product code Lenovo P/N : 42T0588 FRU P/N : 42T0589 EC NO : - Header Code : 1ZF0P
Aug. 29. 2008	A01	p. 17	- Backlight unit (FPC) was updated.
Sep. 3. 2008	A02	p. 17	- Backlight unit (FPC) was updated.
Sep.11.2008	A03	p. 13 p. 6,13	-Backlight unit (life time) was updated. - LED forward current spec was updated.

김진희0304463112925088 20080912120439

GENERAL DESCRIPTION

DESCRIPTION

LTN154AT13-L02 is a color active matrix TFT (Thin Film Transistor) liquid crystal display (LCD) that uses amorphous silicon TFT as a switching devices. This model is composed of a TFT LCD panel, a driver circuit and a backlight system. The resolution of a 15.4" contains 1,280 x 800 pixels and can display up to 262,144 colors. 6 O'clock direction is the Optimum viewing angle.

FEATURES

- Thin and light weight
- High contrast ratio, high aperture structure
- Wide XGA (1280x800 pixels) resolution
- Fast Response Time
- Low power consumption
- LED Back Light
- DE (Data enable) only mode.
- 3.3V LVDS Interface
- On board EDID chip
- Auto Recovery Function
- RoHS Compliance

APPLICATIONS

- Notebook PC and desktop monitors
- If the usage of this product is not for PC application, but for others, please contact SEC

GENERAL INFORMATION

Item	Specification	Unit	Note
Display area	331.2(H) X 207.0(V) (15.4”diagonal)	mm	
Driver element	a-si TFT active matrix		
Display colors	262,144		
Number of pixel	1280 x 800 (16 : 10, Wide XGA)	pixel	
Pixel arrangement	RGB vertical stripe		
Pixel pitch	0.25875(H) x 0.25875(V)	mm	
Display Mode	Normally white		
Surface treatment	HAZE 25, HARD-COATING 3H, AG		

김진희0304463112925088 20080912120439

Mechanical Information

Item		Min.	Typ.	Max.	Unit	Note
Module size	Horizontal (H)	343.5	344.0	344.5	mm	
	Vertical (V)	221.6	222.1	222.6	mm	
	Depth (D)	-	6.2	6.5	mm	
Weight		-	530	560	g	

1. ABSOLUTE MAXIMUM RATINGS

1.1 ENVIRONMENTAL ABSOLUTE RATINGS

Item	Symbol	Min.	Max.	Unit	Note
Storage temperate	T_{STG}	-20	60	°C	(1)
Operating temperate (Temperature of glass surface)	T_{OPR}	0	50	°C	(1)
Shock (non-operating)	Snop	-	210	G	(2),(5)
			50		(3),(5)
Vibration (non-operating)	Vnop	-	2.41	G	(4),(5)

Note (1) Temperature and relative humidity range are shown in the figure below.
95 % RH Max. (40 ^{O}C ≥ Ta)
Maximum wet - bulb temperature at 39 ^{O}C or less. (Ta > 40 ^{O}C) No condensation.
(2) 3ms, half sine wave, one time for ±X,±Y,±Z.
(3) 18ms, Trapezoidal wave, one time for ±X,±Y,±Z.
(4) 5~500 Hz, Random vibration, 30 min for X,Y,Z.
(5) At testing Vibration and Shock, the fixture in holding the Module to be tested have to be hard and rigid enough so that the Module would not be twisted or bent by the fixture.

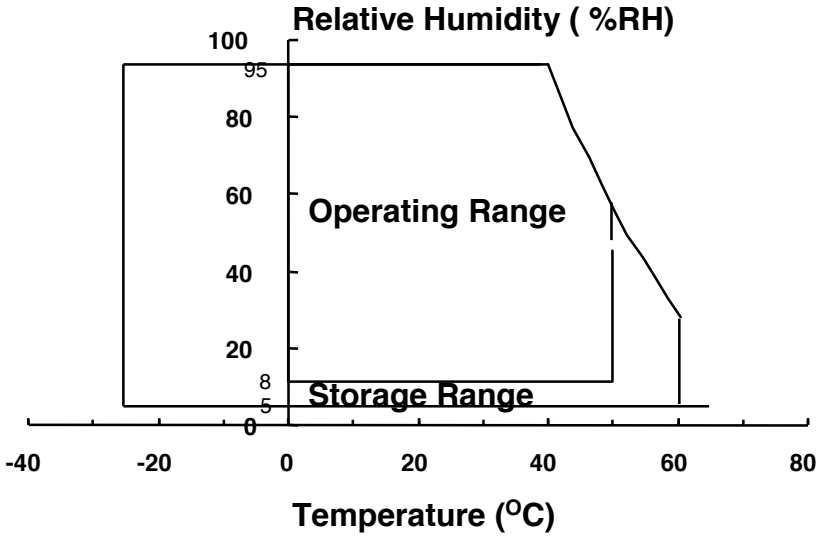

김진희0304463112925088 20080912120439

1.2 ELECTRICAL ABSOLUTE RATINGS

(1) TFT LCD MODULE

V_{DD} =3.3V, V_{SS} = GND = 0V

Item	Symbol	Min.	Max.	Unit	Note
Power Supply Voltage	V_{DD}	V_{DD} - 0.3	V_{DD} + 0.3	V	(1)
Logic Input Voltage	V_{IN}	V_{DD} - 0.3	V_{DD} + 0.3	V	(1)

NOTE (1) Within Ta (25 ± 2 ^{O}C)

(2) BACK-LIGHT UNIT

Ta = 25 ± 2 °C

Item	Symbol	Min	Typ.	Max.	Unit	Note
LED Current	I_L	-	18	19	mA	(1)
LED Voltage	F_V	-	3.2	-	V	(1)

NOTE (1) Permanent damage to the device may occur if maximum values are exceeded.
Functional operation should be restricted to the conditions described under Normal Operating Conditions.

김진희0304463112925088 20080912120439

2. OPTICAL CHARACTERISTICS

The following items are measured under stable conditions. The optical characteristics should be measured in a dark room or equivalent state with the methods shown in Note (5).
Measuring equipment : TOPCON SR-3

* Ta = 25±2°C , Vcc=3.3V, fv= 60Hz, f_{DCLK}=71.11MHz, I_L= 18mArms

Item		Symbol	Condition	Min.	Typ.	Max	Unit	Note
Contrast Ratio (5 Points)		CR	Normal Viewing Angle $\phi = 0$ $\theta = 0$	300	500	-	-	(1), (2), (5)
Response Time at 25℃	Rising	T_R+T_f		-	16	25	msec	(1), (3)
	Falling							
Average Luminance of White (5 points)		$Y_{L,AVE}$		175	200	-	cd/m^2	I_L=18mA (1), (4)
Color Chromaticity (CIE)	Red	R_X		0.555	0.585	0.615	-	(1), (5) SR-3
		R_Y		0.311	0.341	0.371		
	Green	G_X		0.312	0.342	0.372		
		G_Y		0.532	0.562	0.592		
	Blue	B_X		0.121	0.151	0.181		
		B_Y		0.083	0.113	0.143		
	White	W_X		0.283	0.313	0.343		
		W_Y		0.299	0.329	0.359		
Viewing Angle	Hor.	θ_L	CR ≥ 10	-	45	-	Degrees	(1), (5) SR-3
		θ_H		-	45	-		
	Ver.	ϕ_H		-	20	-		
		ϕ_L		-	45	-		
13 Points White Variation		δ_L		60%	-	-	%	(6)
5 Points White Variation		δ_L		80%	-	-	%	(6)

김진희0304463112925088 20080912120439

Note 1) Definition of Viewing Angle : Viewing angle range (10≤ C/R at center point)

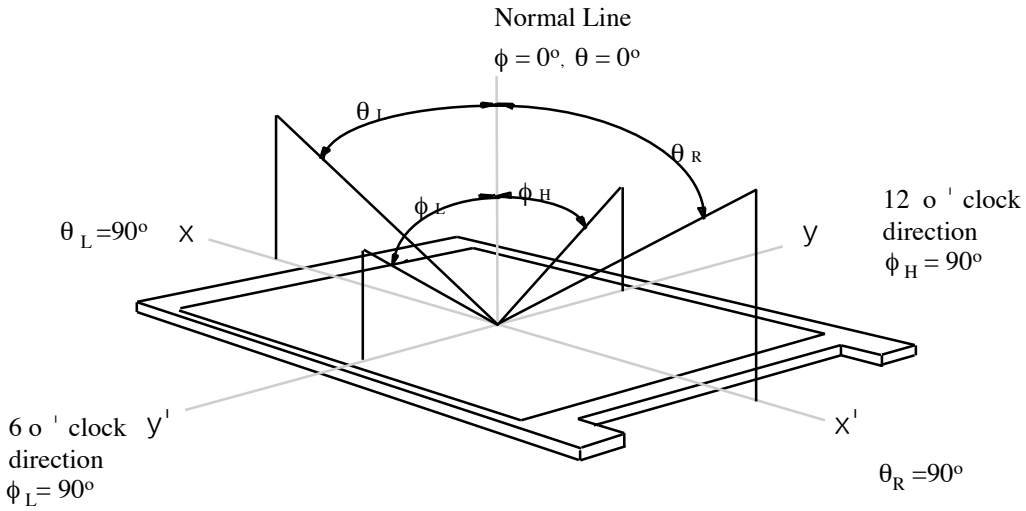

Note 2) Definition of Contrast Ratio (CR) : Ratio of gray max (Gmax) ,gray min (Gmin) at 5 points(4, 5, 7, 9, 10)

$$CR = \frac{CR(4) + CR(5) + CR(7) + CR(9) + CR(10)}{5}$$

POINTS : (4) , (5) , (7) , (9) , (10) at FIGURE OF NOTE 6)

Note 3) Definition of Response time : Sum of T_R ,T_F

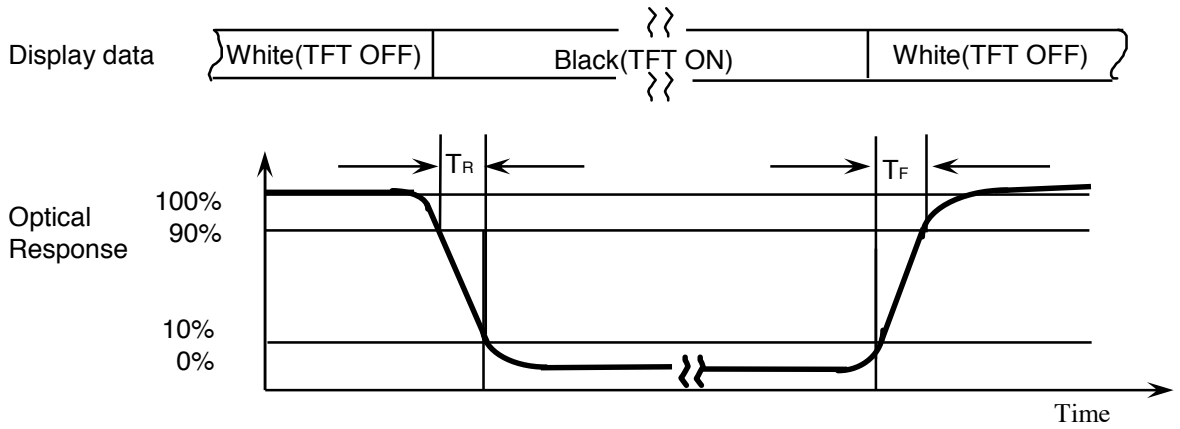

김진희0304463112925088 20080912120439

Note 4) Definition of Luminance of White : measure the luminance of white at 5 points.

Average Luminance of White ($Y_{L,AVE}$)

$$Y_{L,AVE} = \frac{Y_{L4} + Y_{L5} + Y_{L7} + Y_{L9} + Y_{L10}}{5}$$

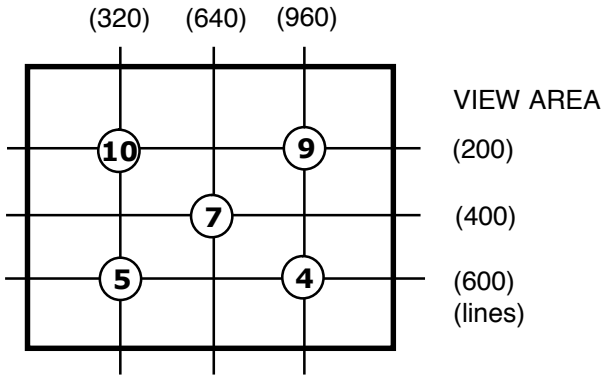

Note 5) After stabilizing and leaving the panel alone at a given temperature for 30 min , the measurement should be executed. Measurement should be executed in a stable, windless,and dark room.
30 min after lighting the back-light. This should be measured in the center of screen.
Lamp current : 6.0mArms
Environment condition : Ta = 25°C ±2 °C

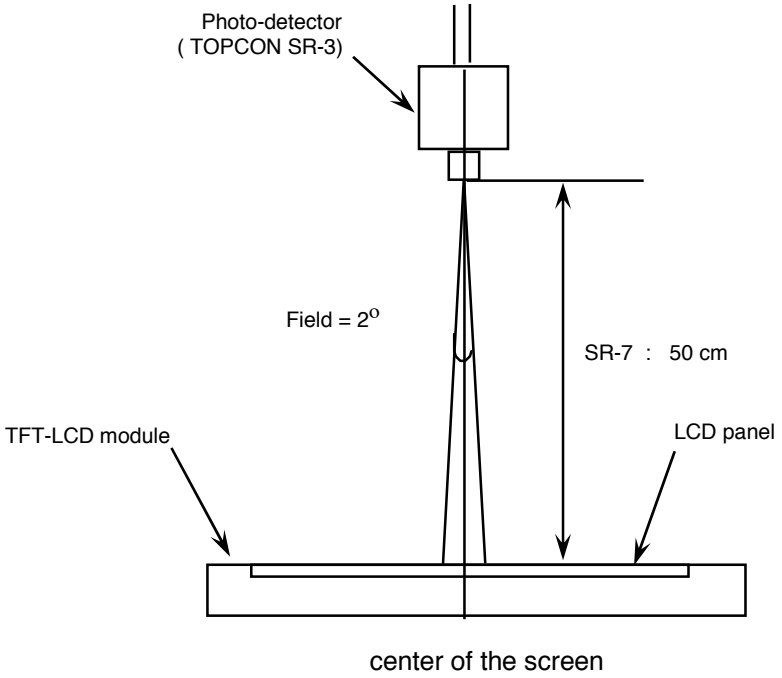

Optical characteristics measurement setup

김진희0304463112925088 20080912120439

Note 6) Definition of 13 points white variation, CR variation(CVER) [① ~ ⑬]

$$\text{13 points white variation } (\%) = \frac{\text{Minimum luminance of 13 points}}{\text{Maximum luminance of 13 points}} \times 100$$

Meet ISO13406-2 Luminance uniformity

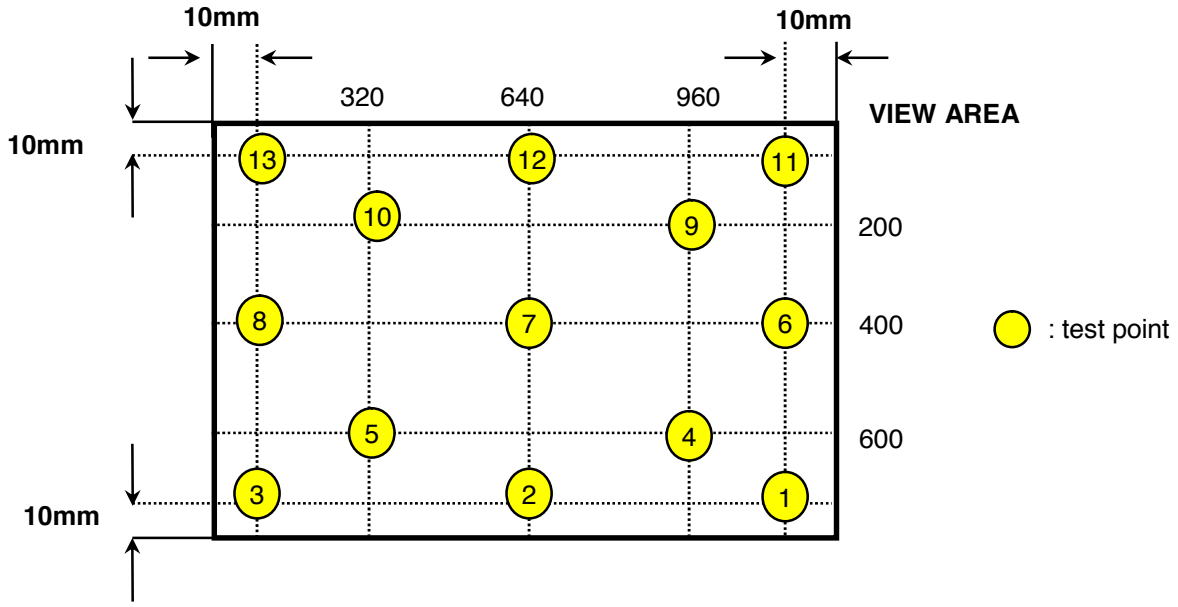

Note 7) Definition of 5 points white variation, CR variation(CVER) [*4,5,7,9,10*]

$$\text{5 points white variation } (\%) = \frac{\text{Minimum luminance of 5 points}}{\text{Maximum luminance of 5 points}} \times 100$$

김진희0304463112925088 20080912120439

3. ELECTRICAL CHARACTERISTICS

3.1 TFT LCD MODULE

Ta=25 ± 2 ºC

ITEM			SYMBOL	MIN	TYP	MAX	UNIT	NOTE
Voltage of Power Supply			V_{DD}	3.0	3.3	3.6	V	
Differential Input Voltage for LVDS Receiver Threshold		High	V_{IH}	-	-	+100	mV	V_{CM}=+1.2V
		Low	V_{IL}	-100	-	-	mV	
Vsync Frequency	60Hz	Hsync Freq	F_H	48.24	49.38	60	KHz	
		Main Freq	F_{DCLK}	65.12	71.11	85	MHz	
	50Hz	Hsync Freq	F_H	40.2	41.15	50	KHz	
		Main Freq	F_{DCLK}	54.27	59.26	70.83	MHz	
	40Hz	Hsync Freq	F_H	32.16	32.92	40	KHz	
		Main Freq	F_{DCLK}	43.41	47.4	56.67	MHz	
Rush Current			I_{RUSH}	-	-	1.5	A	(4)
Current of Power Supply		White	I_{DD}	-	300	-	mA	(2),(3)*a
		Mosaic		-	350	-	mA	(2),(3)*b
		WinXP Pattern		-	350	-	mA	(2),(3)*c
		Max Pattern		-	450	520	mA	(2),(3)*d

Note (1) Display data pins and timing signal pins should be connected.(GND=0V)

(2) f_V=60Hz, f_{DCLK} =71.11MHZ, Vdd = 3.3V , DC Current.

(3) Power dissipation pattern

*a) White Pattern

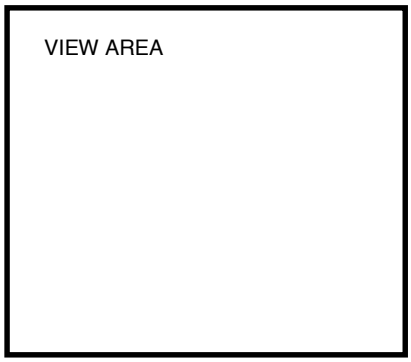

*b) Mosaic Pattern

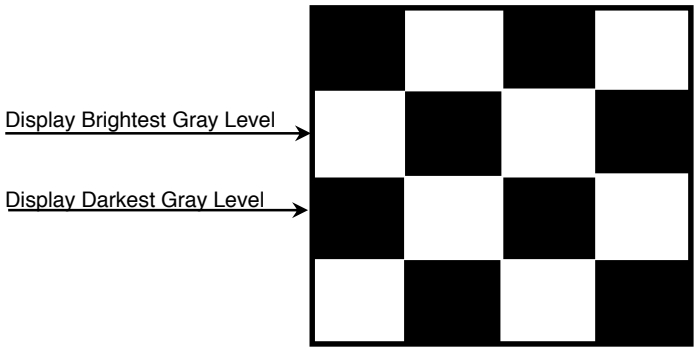

김진희0304463112925088 20080912120439

*c) WinXP Pattern

*d) 1dot Inversion Pattern

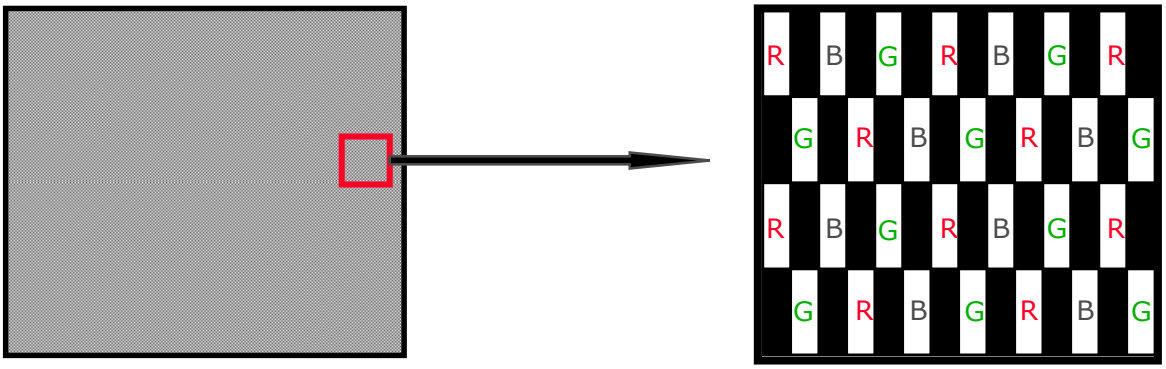

4) Rush current measurement condition

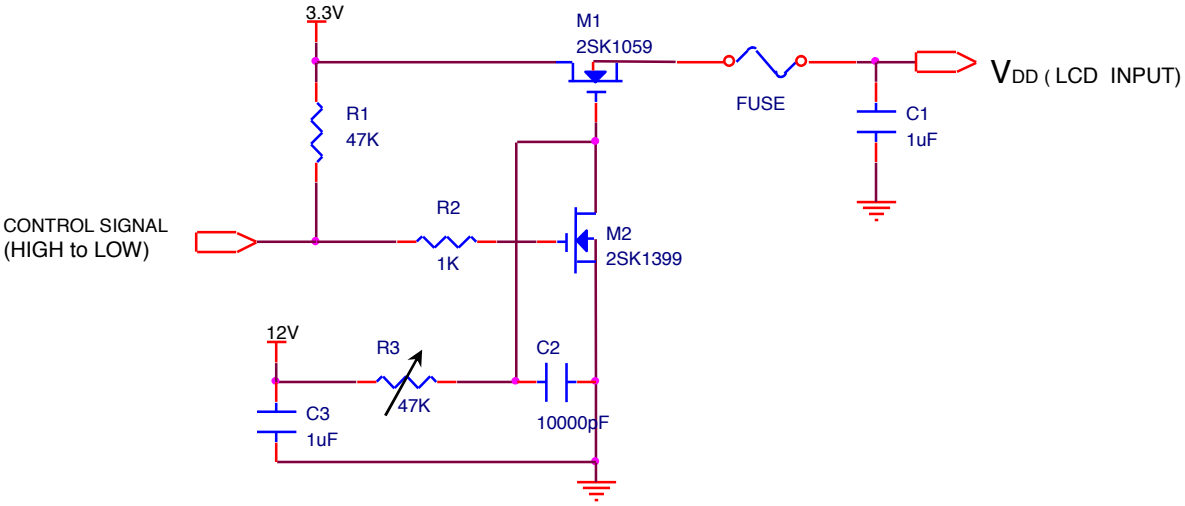

VDD rising time is 470us

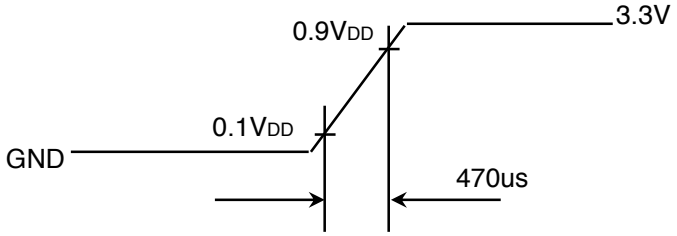

김진희0304463112925088 20080912120439

3.2 BACK-LIGHT UNIT

White LED chip P/N : SLSNNWH421US (SEM)

Ta= 25 ± 2 °C

Item	Symbol	Min.	Typ.	Max.	Unit	Note
LED Forward Current	I_F	-	18	19	mA	
LED Forward Voltage	V_F	-	3.2	-	V	
LED Array Voltage	V_P	-	25.6	-	V	V_F X 8 LEDs
Power Consumption	P	-	2.76	-	W	I_F X V_F X 48LEDs 6 parallel, 8 serial
Operating Life Time	Hr	-	10,000	-	Hr	(1)

Note (1) Life time (Hr) of LEDs can be defined as the time in which it continues to operate under the condition Ta= 25 ± 2 °C and I_F = 18.0 mA until one of the following event occurs.
- When the brightness becomes 50% or lower than the original
- LCD module MTBF

Ta= 25 ± 2 °C

김진희0304463112925088 20080912120439

Approval

4. BLOCK DIAGRAM

4.1 TFT LCD Module

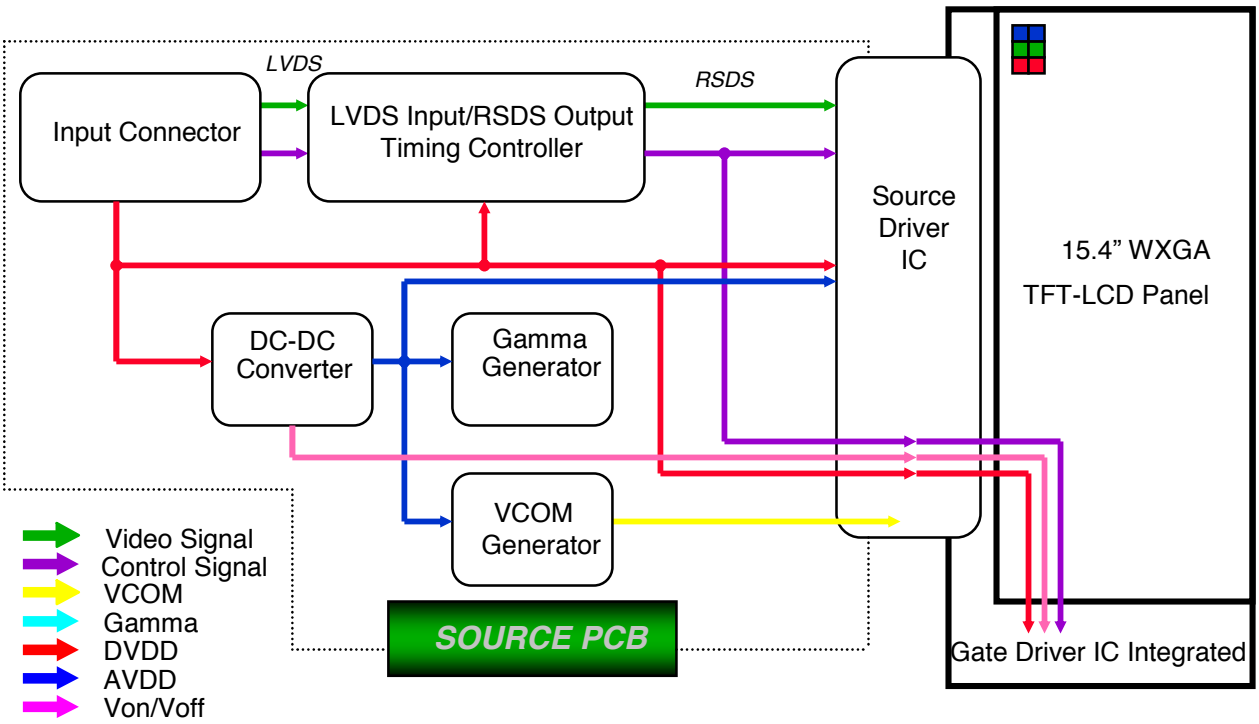

김진희0304463112925088 20080912120439

Approval

5. INPUT TERMINAL PIN ASSIGNMENT

5.1. Input Signal & Power (LVDS Connector : IS100-L30R-C15, UJU)

Pin No.	Symbol	Function	Remark
1	GND	GROUND	
2	VDD	POWER SUPPLY, +3.3V	
3	VDD	POWER SUPPLY, +3.3V	
4	V_{EDID}	DDC +3.3V POWER	
5	BIST_CON	BIST Mode Control Pin	
6	CLK_{EDID}	DDC CLOCK	
7	$DATA_{EDID}$	DDC DATA	
8	ORX0-	Negative LVDS Differential Data Input For Odd Pixel	
9	ORX0+	Positive LVDS Differential Data Input For Odd Pixel	
10	GND	GROUND	
11	ORX1-	Negative LVDS Differential Data Input For Odd Pixel	
12	ORX1+	Positive LVDS Differential Data Input For Odd Pixel	
13	GND	GROUND	
14	ORX2-	Negative LVDS Differential Data Input For Odd Pixel	
15	ORX2+	Positive LVDS Differential Data Input For Odd Pixel	
16	GND	GROUND	
17	ORXC-	Negative LVDS Differential Clock Input For Odd Pixel	
18	ORXC+	Positive LVDS Differential Clock Input For Odd Pixel	
19	GND	GROUND	
20	ERX0-	NC	
21	ERX0+	NC	
22	GND	NC	
23	ERX1-	NC	
24	ERX1+	NC	
25	GND	NC	
26	ERX2-	NC	
27	ERX2+	NC	
28	GND	NC	
29	ERXC-	NC	
30	ERXC+	NC	

김진희0304463112925088 20080912120439

5.2 LVDS Transmitter : Transmitter **DS90CF383** or Compatible

Pin No.	Name	RGB Signal	Pin No.	Name	RGB Signal
51	TxIN0	R0	14	TxIN14	G5
52	TxIN1	R1	15	TxIN15	B0
54	TxIN2	R2	19	TxIN18	B1
55	TxIN3	R3	20	TxIN19	B2
56	TxIN4	R4	22	TxIN20	B3
3	TxIN6	R5	23	TxIN21	B4
4	TxIN7	G0	24	TxIN22	B5
6	TxIN8	G1	27	TxIN24	Hsync
7	TxIN9	G2	28	TxIN25	Vsync
11	TxIN12	G3	30	TxIN26	DE
12	TxIN13	G4	31	TxCLKIN	Clock

FLAT LINK INTERFACE

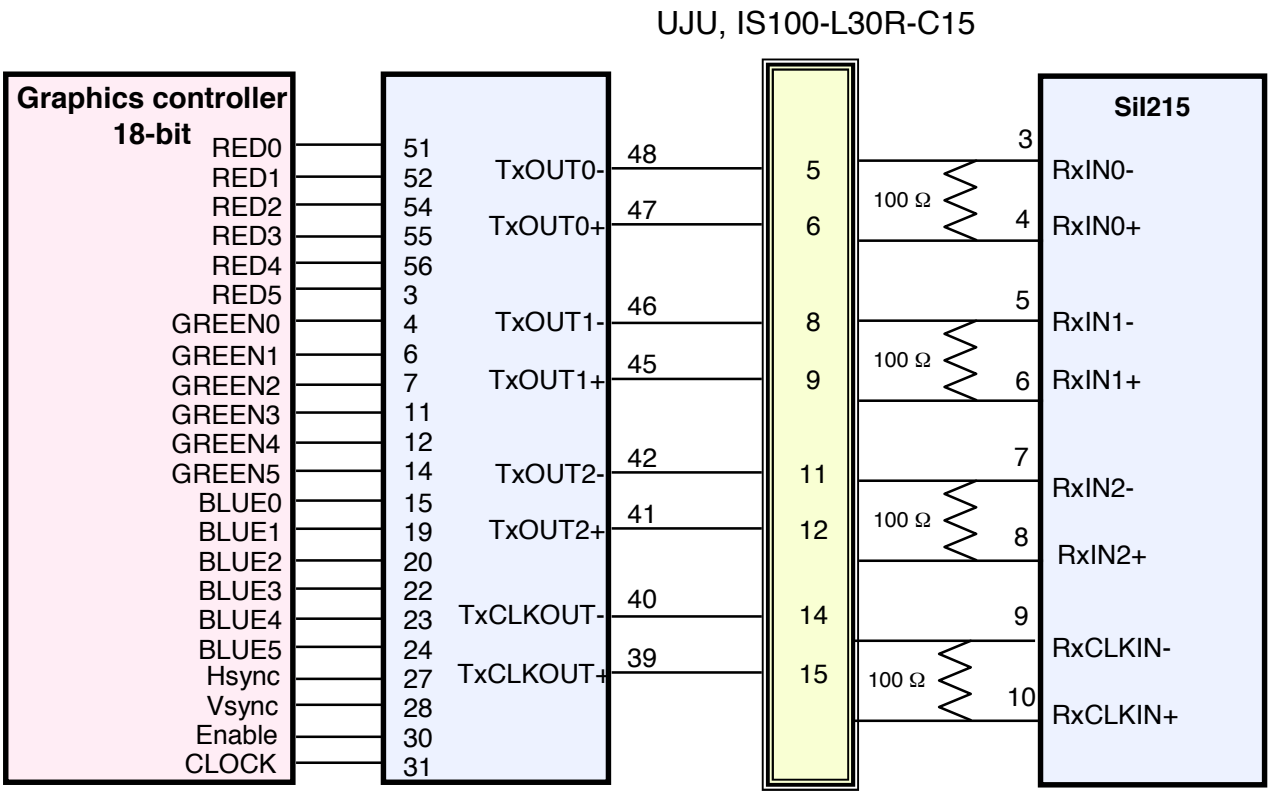

Note : The LCD Module uses a 100ohm resistor between positive and negative lines of each receiver input.

김진희0304463112925088 20080912120439

5.3 BACK LIGHT UNIT (FPC Connector : 1-179397-2 , TYCO)

PIN.NO	1	3	5	7	9	11
SIGNAL	PWR	PWR	PWR	NC	NC	NC
PIN.NO	2	4	6	8	10	12
SIGNAL	FB1	FB2	FB3	FB4	FB5	FB6

5.4 Timing Diagrams of LVDS For Transmission

LVDS Receiver : Integrated T-CON

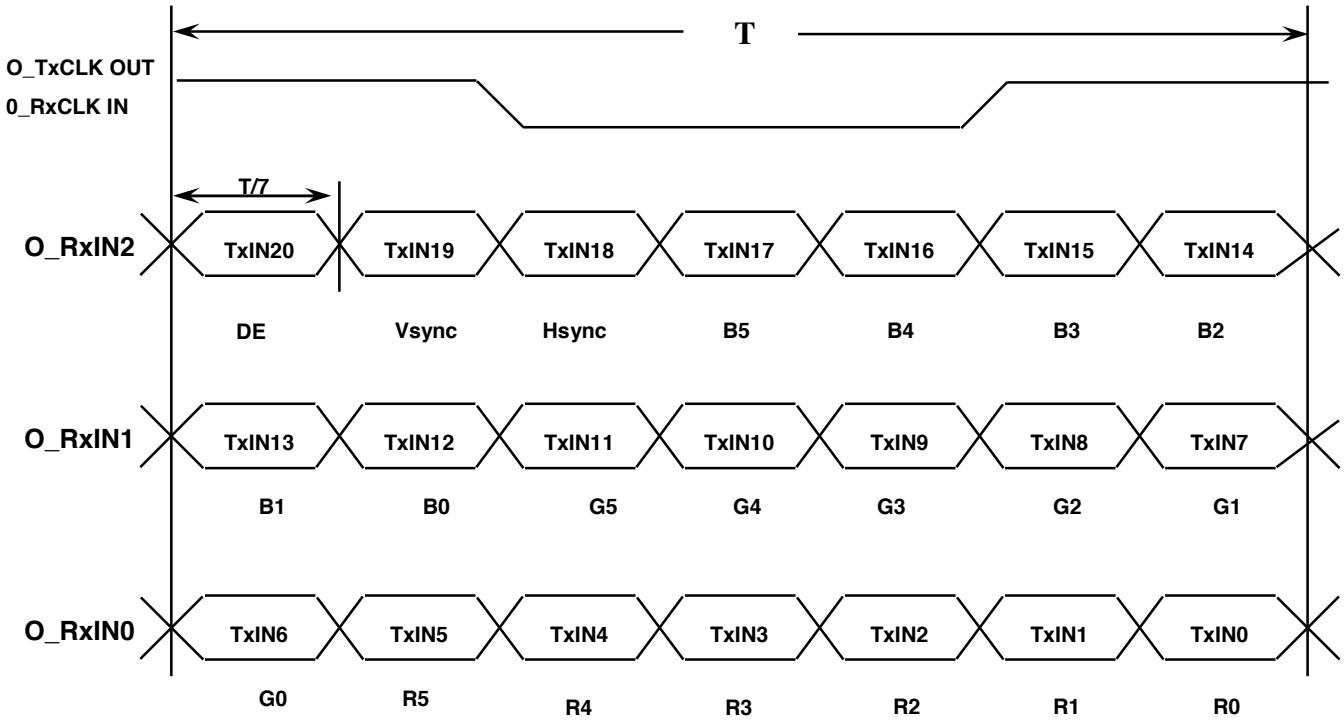

김진희0304463112925088 20080912120439

5.5 Input Signals, Basic Display Colors and Gray Scale of Each Color

Approval

Color	Display	Data Signal																		Gray Scale Level
		Red						Green						Blue						
		R0	R1	R2	R3	R4	R5	G0	G1	G2	G3	G4	G5	B0	B1	B2	B3	45	B5	
Basic Colors	Black	0	0	0	0	0	0	0	0	0	0	0	0	0	0	0	0	0	0	-
	Blue	0	0	0	0	0	0	0	0	0	0	0	0	1	1	1	1	1	1	-
	Green	0	0	0	0	0	0	1	1	1	1	1	1	0	0	0	0	0	0	-
	Cyan	0	0	0	0	0	0	1	1	1	1	1	1	1	1	1	1	1	1	-
	Red	1	1	1	1	1	1	0	0	0	0	0	0	0	0	0	0	0	0	-
	Magenta	1	1	1	1	1	1	0	0	0	0	0	0	1	1	1	1	1	1	-
	Yellow	1	1	1	1	1	1	1	1	1	1	1	1	0	0	0	0	0	0	-
	White	1	1	1	1	1	1	1	1	1	1	1	1	1	1	1	1	1	1	-
Gray Scale Of Red	Black	0	0	0	0	0	0	0	0	0	0	0	0	0	0	0	0	0	0	R0
	Dark	1	0	0	0	0	0	0	0	0	0	0	0	0	0	0	0	0	0	R1
	↑	0	1	0	0	0	0	0	0	0	0	0	0	0	0	0	0	0	0	R2
	:	:	:	:	:	:	:	:	:	:	:	:	:	:	:	:	:	:	:	R3~R60
	:	:	:	:	:	:	:	:	:	:	:	:	:	:	:	:	:	:	:	
	↓	1	0	1	1	1	1	0	0	0	0	0	0	0	0	0	0	0	0	R61
	Light	0	1	1	1	1	1	0	0	0	0	0	0	0	0	0	0	0	0	R62
	Red	1	1	1	1	1	1	0	0	0	0	0	0	0	0	0	0	0	0	R63
Gray Scale Of Green	Black	0	0	0	0	0	0	0	0	0	0	0	0	0	0	0	0	0	0	G0
	Dark	0	0	0	0	0	0	1	0	0	0	0	0	0	0	0	0	0	0	G1
	↑	0	0	0	0	0	0	0	1	0	0	0	0	0	0	0	0	0	0	G2
	:	:	:	:	:	:	:	:	:	:	:	:	:	:	:	:	:	:	:	G3~G60
	:	:	:	:	:	:	:	:	:	:	:	:	:	:	:	:	:	:	:	
	↓	0	0	0	0	0	0	1	0	1	1	1	1	0	0	0	0	0	0	G61
	Light	0	0	0	0	0	0	0	1	1	1	1	1	0	0	0	0	0	0	G62
	Green	0	0	0	0	0	0	1	1	1	1	1	1	0	0	0	0	0	0	G63
Gray Scale Of Blue	Black	0	0	0	0	0	0	0	0	0	0	0	0	0	0	0	0	0	0	B0
	Dark	0	0	0	0	0	0	0	0	0	0	0	0	1	0	0	0	0	0	B1
	↑	0	0	0	0	0	0	0	0	0	0	0	0	0	1	0	0	0	0	B2
	:	:	:	:	:	:	:	:	:	:	:	:	:	:	:	:	:	:	:	B3~B60
	:	:	:	:	:	:	:	:	:	:	:	:	:	:	:	:	:	:	:	
	↓	0	0	0	0	0	0	0	0	0	0	0	0	1	0	1	1	1	1	B61
	Light	0	0	0	0	0	0	0	0	0	0	0	0	0	1	1	1	1	1	B62
	Blue	0	0	0	0	0	0	0	0	0	0	0	0	1	1	1	1	1	1	B63

Note 1) Definition of gray :
Rn: Red gray, Gn: Green gray, Bn: Blue gray (n=gray level)
Note 2)Input signal: 0 =Low level voltage, 1=High level voltage

SEC Secret

김진희0304463112925088 20080912120439

Approval

5.6 Pixel Format in the display

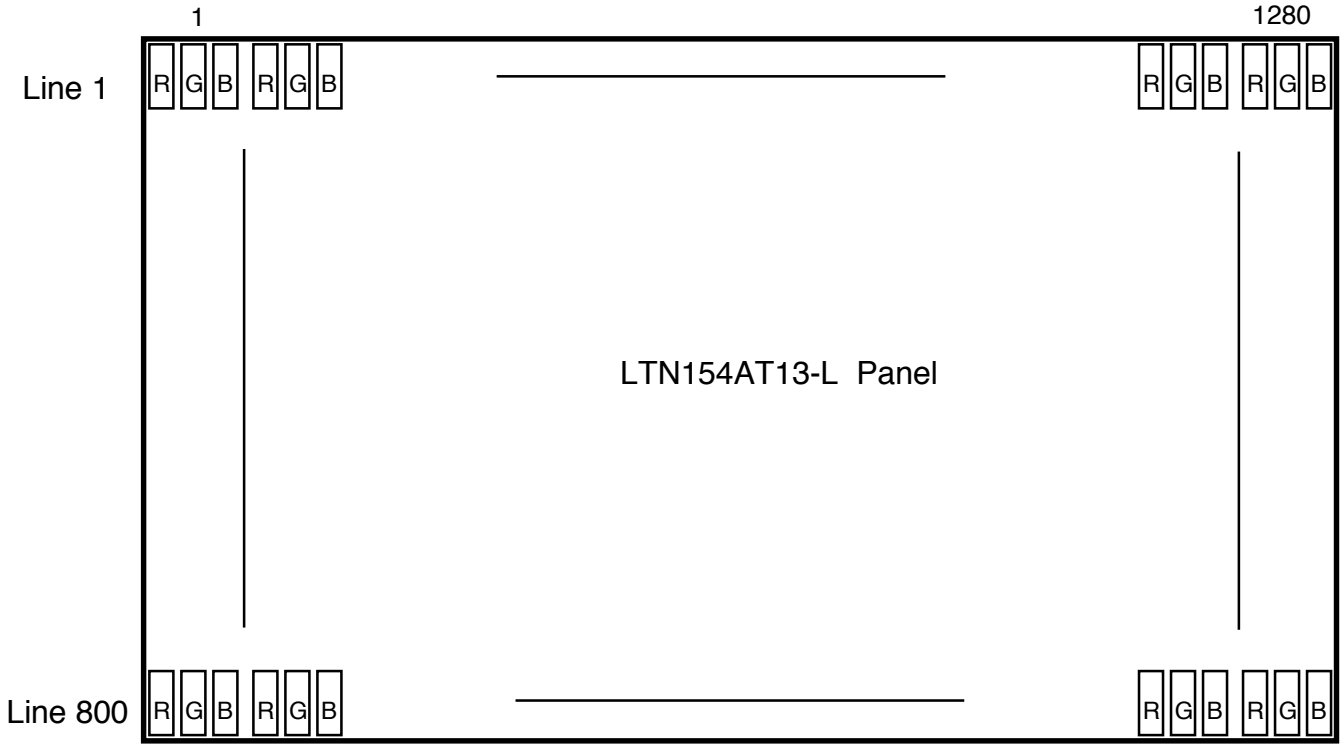

김진희0304463112925088 20080912120439

6. INTERFACE TIMING

6.1 Timing Parameters

Signal	Item	Symbol	Min.	Typ.	Max.	Unit	Note
Frame Frequency	Cycle	TV	-	823	-	Lines	-
Vertical Active Display Term	Display Period	TVD	-	800	-	Lines	-
One Line Scanning Time	Cycle	TH	-	1440	-	Clocks	-
Horizontal Active Display Term	Display Period	THD	-	1280	-	Clocks	-
Vertical Blank Term	Cycle	Vblank	-	23	-	lines	
Horizontal Blank Term	Cycle	Hblank	-	160	-	clocks	

6.2 Timing diagrams of interface signal

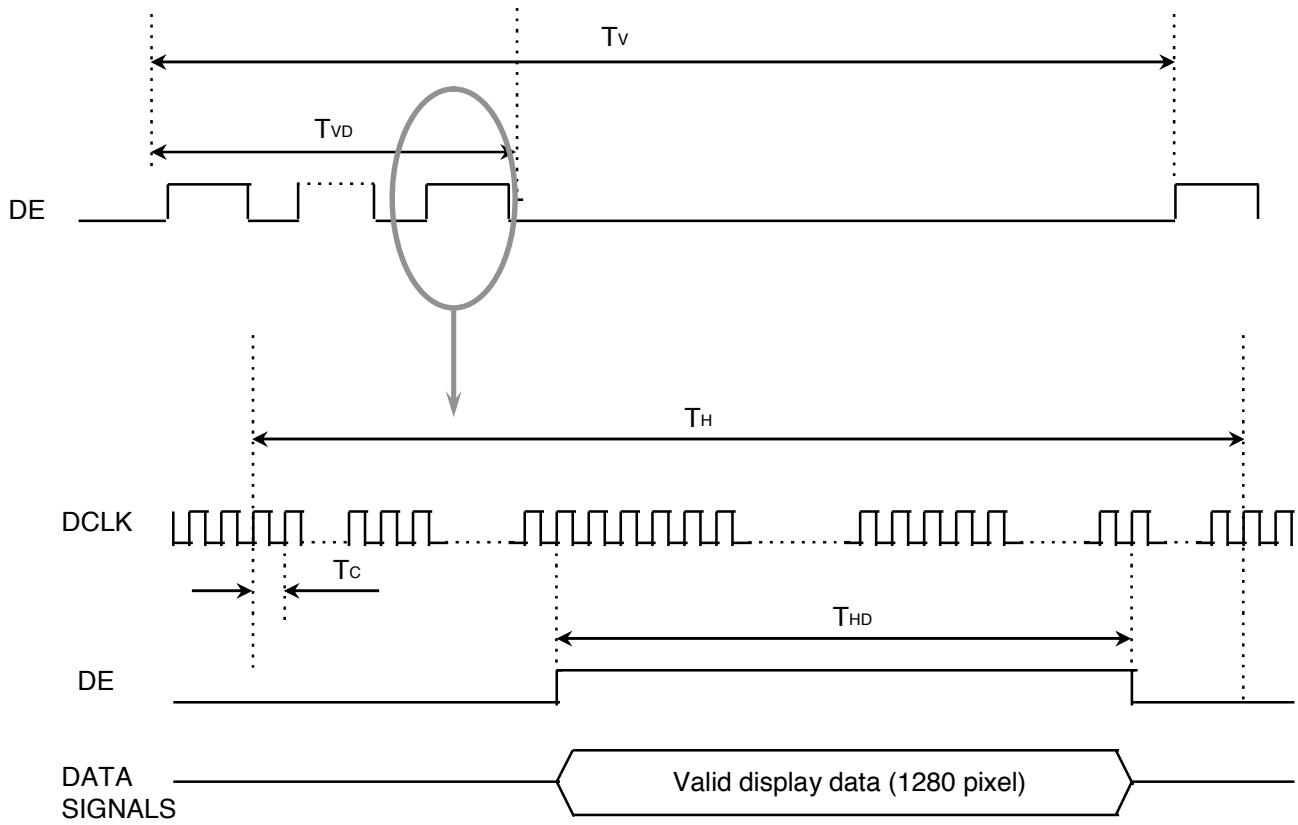

김진희0304463112925088 20080912120439

6.3 Power ON/OFF Sequence

: To prevent a latch-up or DC operation of the LCD module, the power on/off sequence shall be as shown below.

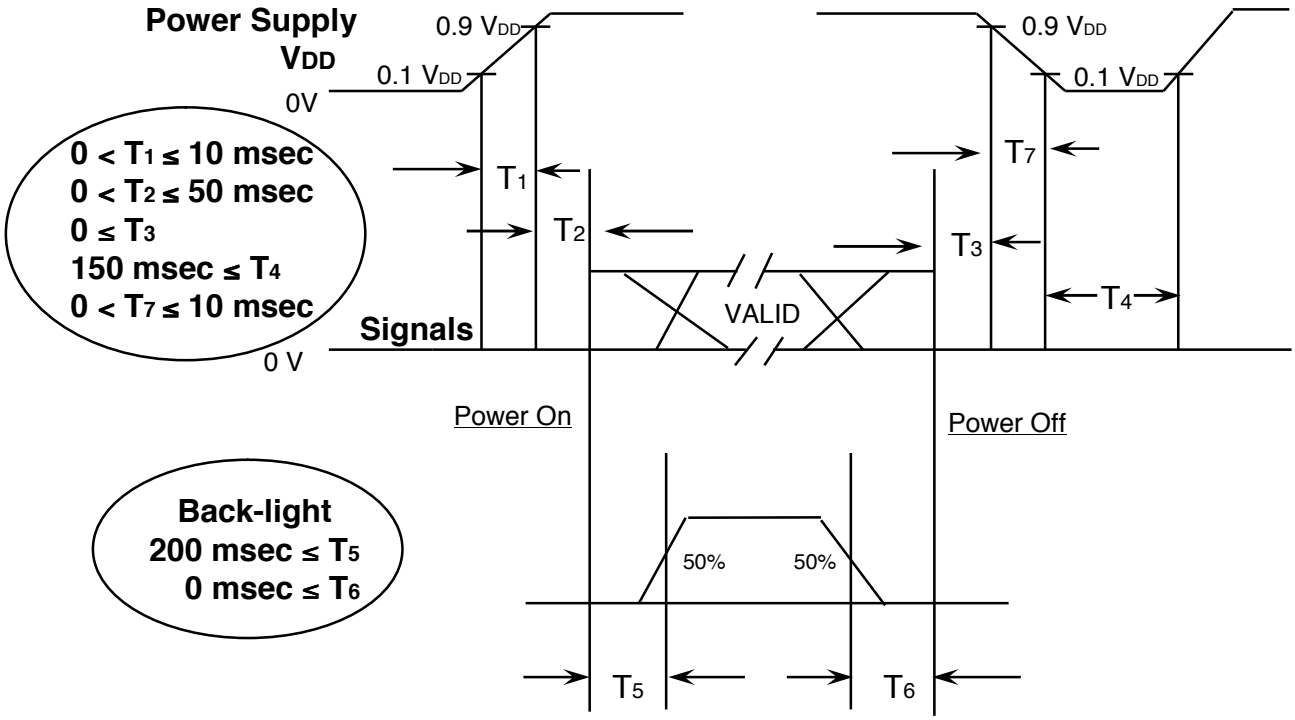

Power ON/OFF Sequence

T1 : Vdd rising time from 10% to 90%
T2 : The time from Vdd to valid data at power ON.
T3 : The time from valid data off to Vdd off at power Off.
T4 : Vdd off time for Windows restart
T5 : The time from valid data to B/L enable at power ON.
T6 : The time from valid data off to B/L disable at power Off.
T7 : Vdd falling time from 90% to 10%

NOTE.

(1) The supply voltage of the external system for the module input should be the same as the definition of V_{DD}.

(2) Apply the lamp voltage within the LCD operation range. When the backlight turns on before the LCD operation or the LCD turns off before the backlight turns off, the display may momentarily become white.

(3) In case of V_{DD} = off level, please keep the level of input signals on the low or keep a high impedance.

(4) T4 should be measured after the module has been fully discharged between power off and on period.

(5) Interface signal shall not be kept at high impedance when the power is on.

김진희0304463112925088 20080912120439

7. Mechanical Outline Dimension

Approval

[Refer to next page]

SEC Secret

김진희0304463112925088 20080912120439

FILE NO.

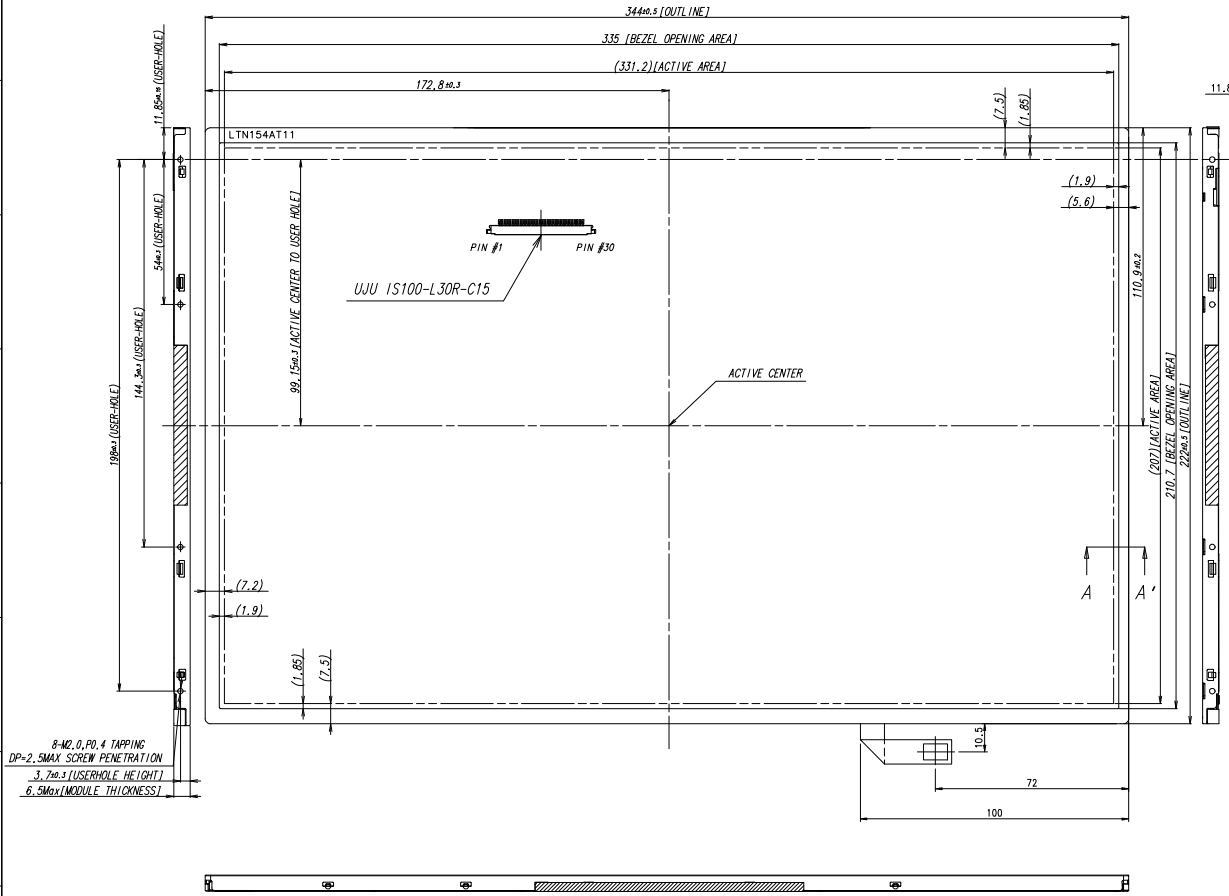

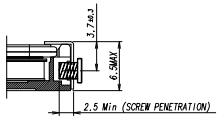

SECTION A-A'

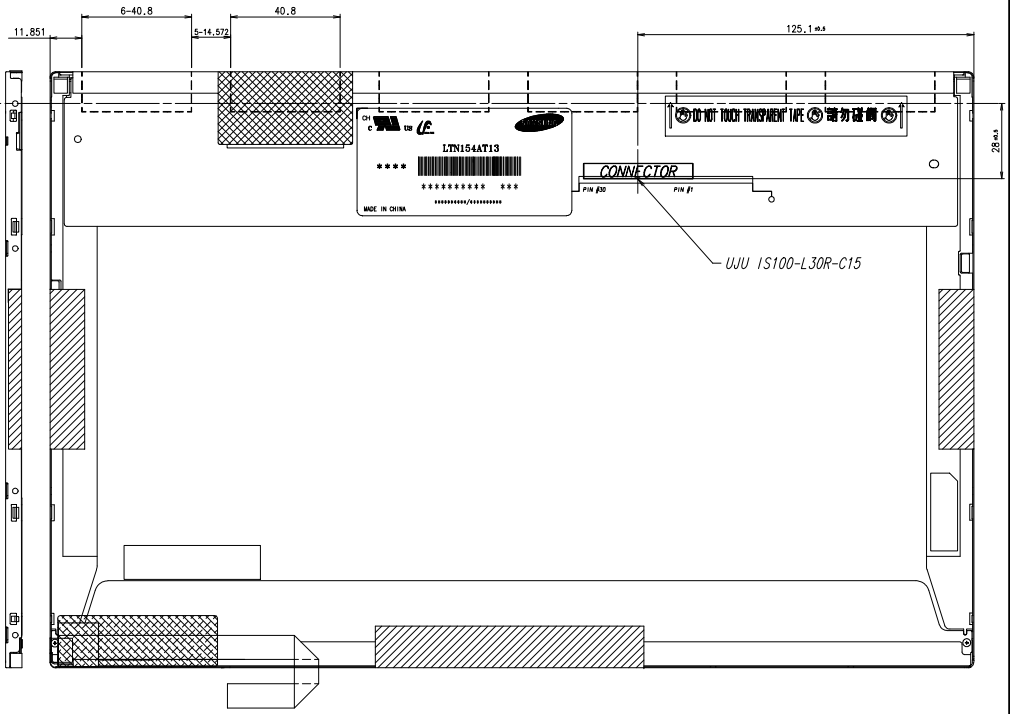

* NOTE

1. SIGNAL INTERFACE CONNECTOR TO BE SPECIFIED AS BELOW.
   - MAKER : UJU OR COMPATIBLE
   - INPUT CONNECTOR : UJU IS100-L30R-C15
2. ALLOWED DEPTH OF USERHOLE SCREW INSERTION IS MAX 2.5mm
3. TORQUE SPEC : MAX 2.5 Kgf-cm (5 TIMES)
4. WEIGHT SPEC : TYP 540g, MAX 560g
5. IN ORDER TO AVOID IC DAMAGE, IT IS NOT ALLOW THAT OVERLAPPING OF CABLES OR ANTENNAS, CAMERA, WLAN, WWAN OVER THESE COF LOCATIONS.

REVISION

GENERAL TOLERANCE			
STEP	LEVEL 1	LEVEL 2	LEVEL 3
0 < X ≤ 4	±0.05	±0.1	±0.2
4 < X ≤ 16	±0.08	±0.15	±0.3
16 < X ≤ 64	±0.12	±0.25	±0.5
64 < X ≤ 256	±0.25	±0.4	±0.8

REV	DATE	DESCRIPTION OF REVISION				REASON	CHG'D BY
		UNIT mm	DRA'N BY	DES'D BY	CHK'D BY	APP'D BY	MODEL NAME	LTN154AT13
		SCALE 1/1		Y.H.NAM			PART/SHEET NAME	OUTLINE DIMENSION	SHEET 1/1
		TOLERANCE LEVEL3	. .	2008.08.18					
		SAMSUNG ELECTRONICS				SPEC. NO	CODE NO.		VER. 000

8. Product Markings and Others

A nameplate bearing followed by is affixed to a shipped product at the specified location on each product.

(1)Parts number : LTN154AT13-L02
(2)Revision : Three letter
(3)Control code : One letter
(4)Lot number : X X X X X X X X X X

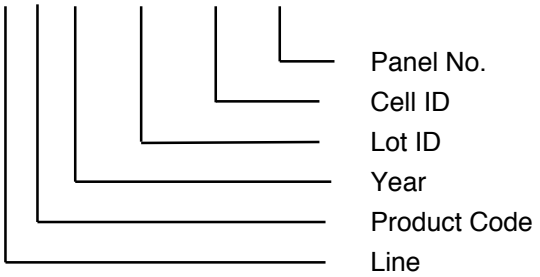

NOTE 1). This code indicating year is omitted in the products of SESL site.

(5) Product Label Definition

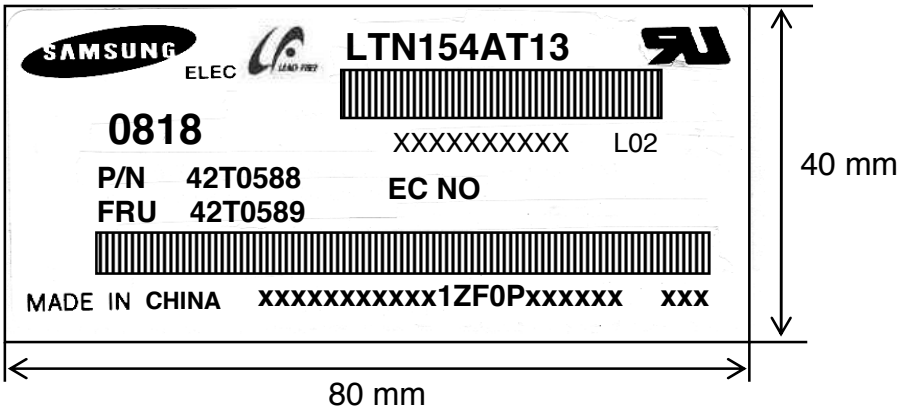

TFT-LCD Product name	: LTN154AT13
Lot number	: XXXXXXXXXXX
Revision Code	: L02
Inspected work week	: 0818(2008 Year, 18th week)
P/N	: Lenovo Part Number (42T0588)
EC NO	: Engineering Change Number (Blank)
FRU	: Field Replaceable Unit Part Number(42T0589)
Header Code	: 1ZF0P
Lenovo Barcode	: XXXXXXXXXXX1ZF0P XXXXXX XXX

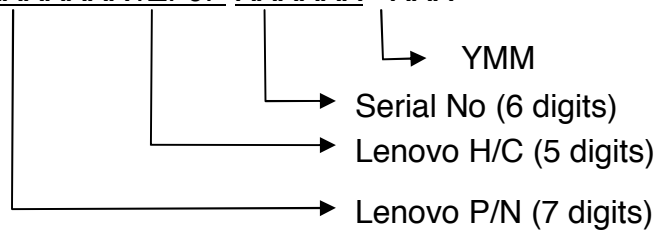

김진희0304463112925088 20080912120439

9. GENERAL PRECAUTIONS

1. Handling

(a) When the module is assembled, It should be attached to the system firmly using selected mounting holes. Be careful not to twist and bend the modules.

(b) Refrain from strong mechanical shock and / or any force to the module. In addition to damage, this may cause improper operation or damage to the module and CCFT backlight.

(c) Note that polarizers are very fragile and could be easily damaged. Do not press or scratch the surface harder than a HB pencil lead.

(d) Wipe off water droplets or oil immediately. If you leave the droplets for a long time, Staining and discoloration may occur.

(e) If the surface of the polarizer is dirty, clean it using some absorbent cotton or soft cloth.

(f) The desirable cleaners are water, IPA(Isoprophyl Alcohol) or Hexane.
Do not use Ketone type materials(ex. Acetone), Ethyl alcohol, Toluene, Ethyl acid or Methyl chloride. It might permanent damage to the polarizer due to chemical reaction.

(g) If the liquid crystal material leaks from the panel, it should be kept away from the eyes or mouth . In case of contact with hands, legs or clothes, it must be washed away thoroughly with soap.

(h) Protect the module from static , it may cause damage to the C-MOS Gate Array IC.

(i) Use fingerstalls with soft gloves in order to keep display clean during the incoming inspection and assembly process.

(j) Do not disassemble the module.

(k) Do not pull or fold the lamp wire.

(l) Do not adjust the variable resistor which is located on the back side.

(m) Protection film for polarizer on the module shall be slowly peeled off just before use so that the electrostatic charge can be minimized.

(n) Pins of I/F connector shall not be touched directly with bare hands.

김진희0304463112925088 20080912120439

2. STORAGE

(a) Do not leave the module in high temperature, and high humidity for a long time. It is highly recommended to store the module with temperature from 0 to 35°C and relative humidity of less than 70%.

(b) Do not store the TFT-LCD module in direct sunlight.

(c) The module shall be stored in a dark place. It is prohibited to apply sunlight or fluorescent light during the store.

3. OPERATION

(a) Do not connect,disconnect the module in the " Power On" condition.

(b) Power supply should always be turned on/off by following item 6.3 " Power on/off sequence ".

(c) Module has high frequency circuits. Sufficient suppression to the electromagnetic interference shall be done by system manufacturers. Grounding and shielding methods may be important to minimize the interference.

(d) The cable between the backlight connector and its inverter power supply shall be a minimized length and be connected directly . The longer cable between the backlight and the inverter may cause lower luminance of lamp(CCFT) and may require higher startup voltage(Vs).

4. OTHERS

(a) Ultra-violet ray filter is necessary for outdoor operation.

(b) Avoid condensation of water. It may result in improper operation or disconnection of electrode.

(c) Do not exceed the absolute maximum rating value. (the supply voltage variation, input voltage variation, variation in part contents and environmental temperature, so on) Otherwise the module may be damaged.

(d) If the module displays the same pattern continuously for a long period of time,it can be the situation when the image "sticks" to the screen.

(e) This module has its circuitry PCB's on the rear side and should be handled carefully in order not to be stressed.

김진희0304463112925088 20080912120439

Approval

10. EDID

Address (HEX)	FUNCTION	Value HEX	BIN	DEC	ASCII or Data	Notes
00	Header	00	00000000	0		EDID Header
01		FF	11111111	255		
02		FF	11111111	255		
03		FF	11111111	255		
04		FF	11111111	255		
05		FF	11111111	255		
06		FF	11111111	255		
07		00	00000000	0		
08	ID Manufacturer Name	30	00110000	48	L	3 character ID
					E	
09		AE	10101110	174	N	"LEN" as an end-customer
0A	ID Product Code	57	01010111	87		#WXGA LED BL
0B		40	01000000	64		
0C	32-bit serial no.	00	00000000	0		
0D		00	00000000	0		
0E		00	00000000	0		
0F		00	00000000	0		
10	Week of manufacture	00	00000000	0		
11	Year of manufacture	12	00010010	18	2008	2008
12	EDID Structure Ver.	01	00000001	1	1	EDID Ver. 1.0
13	EDID revision #	03	00000011	3	3	EDID Rev. 3
14	Video input definition	80	10000000	128		
15	Max H image size	21	00100001	33	33	33 cm(approx)
16	Max V image size	15	00010101	21	21	21 cm(approx)
17	Display Gamma	78	01111000	120	2.2	Gamma 2.2
18	Feature support	EA	11101010	234		
19	Red/green low bits	03	00000011	3		10000111
1A	Blue/white low bits	15	00010101	21		11111110
1B	Red x/ high bits	97	10010111	151	0.590	Red x 0.590= 1001010010
1C	Red y	57	01010111	87	0.340	Red y 0.340= 0101011100
1D	Green x	52	01010010	82	0.320	Green x 0.320= 0100111101
1E	Green y	8C	10001100	140	0.550	Green y 0.550= 1000110011
1F	Blue x	27	00100111	39	0.152	Blue x 0.152= 001001111
20	Blue y	21	00100001	33	0.130	Blue y 0.130= 001001111
21	White x	50	01010000	80	0.313	White x 0.313= 0101000001
22	White y	54	01010100	84	0.329	White y 0.329= 0101010001
23	Established timing 1	00	00000000	0		
24	Established timing 2	00	00000000	0		
25	Established timing 3	00	00000000	0		
26	Standard timing #1	01	00000001	1		not used
27		01	00000001	1		
28	Standard timing #2	01	00000001	1		not used
29		01	00000001	1		
2A	Standard timing #3	01	00000001	1		not used
2B		01	00000001	1		
2C	Standard timing #4	01	00000001	1		not used
2D		01	00000001	1		
2E	Standard timing #5	01	00000001	1		not used
2F		01	00000001	1		
30	Standard timing #6	01	00000001	1		not used
31		01	00000001	1		
32	Standard timing #7	01	00000001	1		not used
33		01	00000001	1		
34	Standard timing #8	01	00000001	1		not used
35		01	00000001	1		

김진희0304463112925088 20080912120439

Approval

36	Detailed timing/monitor descriptor #1	C7	11000111	199	71.11	Main clock= 71.11 MHz (@60Hz)
37		1B	00011011	27		
38		00	00000000	0	1280	Hor active=640*2 pixels
39		A0	10100000	160	160	Hor blanking=160 pixels
3A		50	01010000	80		4bit : 4bit
3B		20	00100000	32	800	Vertcal active=800 lines
3C		17	00010111	23	23	Vertical blanking=23 lines
3D		30	00110000	48		4bit : 4bit
3E		30	00110000	48	48	Hor sync. Offset=48 pixels
3F		20	00100000	32	32	H sync. Width=32 pixels
40		36	00110110	54	3 6	V sync. Offset=3 lines V sync. Width=6 lines
41		00	00000000	0		2bit : 2bit :2bit :2bit
42		4B	01001011	75	331	H image size= 331 mm(approx)
43		CF	11001111	207	207	V image size = 207 mm(approx)
44		10	00010000	16		
45		00	00000000	0		No Horizontal Border
46		00	00000000	0		No Vertical Border
47		19	00011001	25		
48	Detailed timing/monitor descriptor #2	7A	01111010	122	60.1	Main clock= 60.10 MHz (@50Hz)
49		17	00010111	23		
4A		00	00000000	0	1280	Hor active=640*2 pixels
4B		B1	10110001	177	177	Hor blanking=177 pixels
4C		50	01010000	80		4bit : 4bit
4D		20	00100000	32	800	Vertcal active=800 lines
4E		19	00011001	25	25	Vertical blanking=25 lines
4F		30	00110000	48		4bit : 4bit
50		30	00110000	48	48	Hor sync. Offset=48 pixels
51		20	00100000	32	32	H sync. Width=32 pixels
52		36	00110110	54	3 6	V sync. Offset=3 lines V sync. Width=6 lines
53		00	00000000	0		2bit : 2bit :2bit :2bit
54		4B	01001011	75	331	H image size= 331 mm(approx)
55		CF	11001111	207	207	V image size = 207 mm(approx)
56		10	00010000	16		
57		00	00000000	0		No Horizontal Border
58		00	00000000	0		No Vertical Border
59		19	00011001	25		
5A	descriptor #3	00	00000000	0		Manufacturer Specified (Timing)
5B		00	00000000	0		
5C		00	00000000	0		
5D		0F	00001111	15		
5E		00	00000000	0		
5F		81	10000001	129		**(Horizontal active pixel /8)-31**
60		0A	00001010	10		**Image Aspect Ratio(16:10)**
61		32	00110010	50		**Low Refresh Rate #1(50Hz)**
62		81	10000001	129		**(Horizontal active pixel /8)-31**
63		0A	00001010	10		**Image Aspect Ratio(16:10)**
64		28	00101000	40		**Low Refresh Rate #1(40Hz)**
65		15	00010101	21		**Brightness(1/10nit)**
66		09	00001001	9		**Feature flag(TN mode)**
67		00	00000000	0		
68		4C	01001100	76		**supplier ID "SEC"**
69		A3	10100011	163		
6A		58	01011000	88	[X]	**Product code "X3"**
6B		33	00110011	51	[3]	**(Hex, LSB first)**

김진희0304463112925088 20080912120439

Approval

6C		00	00000000	0		Monitor Name Tag (ASCII)
6D		00	00000000	0		
6E		00	00000000	0		
6F		FE	11111110	254		
70		00	00000000	0		
71		4C	01001100	76	[L]	
72		54	01010100	84	[T]	
73	Detailed timing/monitor	4E	01001110	78	[N]	
74	descriptor #4	31	00110001	49	[1]	
75		35	00110101	53	[5]	
76		34	00110100	52	[4]	
77		41	01000001	65	[A]	
78		54	01010100	84	[T]	
79		31	00110001	49	[1]	
7A		33	00110011	51	[3]	
7B		4C	01001100	76	[L]	
7C		30	00110000	48	[0]	
7D		32	00110010	50	[2]	
7E	Extension Flag	00	00000000	0		
7F	Checksum	**79**	01111001	**121**		

김진희0304463112925088 20080912120439