SAMSUNG ELECTRONICS

Preliminary

TO : General

DATE : June .10, 2003

SAMSUNG TFT-LCD

MODEL NO.:LTN141XB-L02

NOTE :

The information described in this SPEC is preliminary and can be changed without prior notice.

PREPARED BY : K. H. Shin

Technical Customer Service Team

SAMSUNG ELECTRONICS CO., LTD.

wise view™

Preliminary

CONTENTS

Record Of Revision ---------- (3)

General Description ---------- (4)

1. Absolute Maximum Ratings ---------- (5)
   1.1 Absolute Ratings of Environment
   1.2 Electrical Absolute Maximum Ratings

2. Optical Characteristics ---------- (7)

3. Electrical Characteristics ---------- (10)
   3.1 TFT LCD Module
   3.2 Back Light Unit

4. Block Diagram ---------- (13)
   4.1 TFT LCD Module
   4.2 Back Light Unit

5. Input Terminal Pin Assignment ---------- (14)
   5.1 Input Signal & Power
   5.2 LVDS Interface:Transmitter
   5.3 Back Light Unit
   5.4 Timing Diagrams of LVDS for Transmission
   5.5 Input Signals, Basic Display Colors and Gray Scale of Each Color.
   5.6 Pixel Format

6. Interface Timing ---------- (19)
   6.1 Timing Parameters(DE MODE)
   6.2 Timing Diagrams of interface Signal (DE MODE)
   6.3 Power ON/OFF Sequence

7. Outline Dimension ---------- (21)

8. General Precaution ---------- (22)

REVISION HISTORY

Preliminary

Date	Rev.No.	Page	Summary
Jan.15.2003	000	All	- LTN141XB-L02 of general format was First issued.

GENERAL DESCRIPTION

DESCRIPTION

LTN141XB-L02 is a color active matrix TFT (Thin Film Transistor) liquid crystal display (LCD) that uses amorphous silicon TFT as a switching devices. This model is composed of a TFT LCD panel, a driver circuit, a back-light system, inverter, brackets, FPC. The resolution of a 14.1 ″ contains 1024 x 768 pixels and can display up to 262,144colors. 6 o'clock direction is the optimum viewing angle.

FEATURES

- Thin and light weight
- High contrast ratio, high aperture structure
- XGA (1024x768 pixels) resolution
- Low power consumption
- Fast Response
- Single CCFL
- DE(Data enable) only mode
- 3.3V LVDS Interface (1 channel)
- EDID, SPWG Style -B Design

APPLICATIONS

- Notebook PC and desktop monitors
- Display terminals for AV application products
- Monitors for Industrial machine
- If the usage of this product is not for PC application, but for others, please contact SEC

GENERAL INFORMATION

ITEM	SPECIFICATION	UNIT	NOTE
Display area	285.7(H) x 214.3(V) (14.1″ diagonal)	mm	
Driver element	a-Si TFT active matrix		
Display colors	262,144		
Number of pixel	1024 x 768	pixel	
Pixel arrangement	RGB vertical stripe		
Pixel pitch	0.279(H) x 0.279(V)	mm	
Display Mode	Normally white		
Surface treatment	HAZE 25, HARD-COATING 3H		

Mechanical Information

ITEM		MIN.	TYP.	MAX.	NOTE
Module size	Horizontal (H)	298.5	299.0	299.5	
	Vertical (V)	227.4	228.0	228.6	
	Depth (D)	-	-	5.5	
Weight		-	420	435	

Note (1) Measurement condition of outline dimension
. Equipment : Vernier Calipers
. Push Force : 500g ·f (minimum)

1. ABSOLUTE MAXIMUM RATINGS

1.1 ENVIRONMENTAL ABSOLUTE RATINGS

ITEM	SYMBOL	MIN.	MAX.	UNIT	NOTE
Storage temperature	T_{STG}	-25	60	°C	(1)
Operating temperature (Temperature of glass surface)	T_{OPR}	0	50	°C	(1)
Shock (non-operating)	Snop	-	220	G	(2),(4)
Vibration (non-operating)	Vnop	-	1. 5	G	(3),(4)

Note (1) Temperature and relative humidity range are shown in the figure below.
95 % RH Max. (40°C ≥ Ta)
Maximum wet - bulb temperature at 39°C or less. (Ta > 40°C) No condensation.
(2) 220G, 2ms, Half sine wave, one time for ±X, ±Y, ±Z axis
(3) 10 ~ 300 ~ 10 Hz, Sweep rate 10min, 30min for X, Y,Z axis
(4) At testing Vibration and Shock, the fixture in holding the Module to be tested have to be hard and rigid enough so that the Module would not be twisted or bent by the fixture.

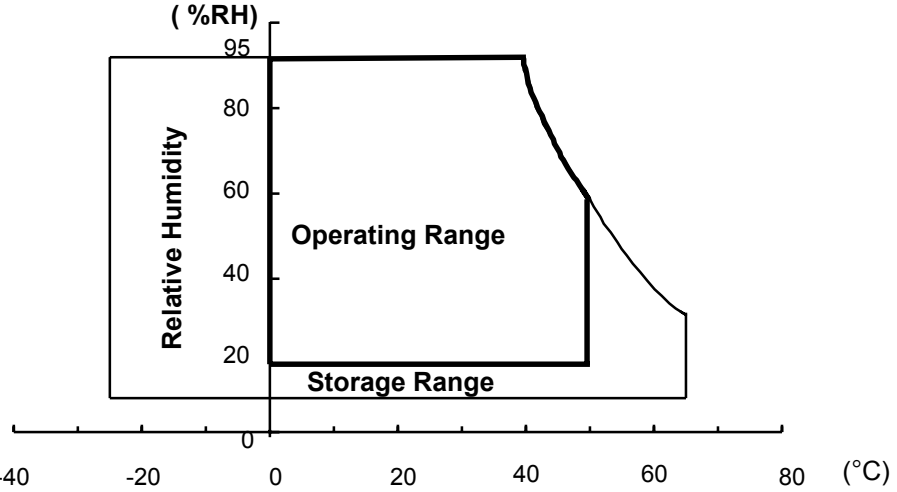

1.2 ELECTRICAL ABSOLUTE RATINGS

(1) TFT LCD MODULE

(Vss = GND = 0 V)

ITEM	SYMBOL	MIN.	MAX.	UNIT	NOTE
Power Supply Voltage	Vcc	Vss-0.3	4.0	V	(1)
Logic Input Voltage	V_{IN}	Vss-0.3	(Vcc + 0.3)	V	(1)

Note (1) Within Ta (25 ± 2°C)

(2) BACK-LIGHT UNIT

Ta = 25 ± 2 ºC

ITEM	SYMBOL	MIN.	MAX.	UNIT	NOTE
Lamp Current	I_L	2.0	7.0	mArms	(1)
Lamp frequency	F_L	50	80	kHz	(1)

Note 1) Permanent damage to the device may occur if maximum values are exceeded
Functional operation should be restricted to the conditions described under normal operating condition

2. OPTICAL CHARACTERISTICS

The following items are measured under stable conditions. The optical characteristics should be measured in a dark room or equivalent state with the methods shown in Note (5).
Measuring equipment : TOPCON BM-5A

* Ta = 25 ± 2°C , V_{DD}=3.3V, fv= 60Hz, f_{DCLK}=65MHz, I_L = 6.0 mA

ITEM		SYMBOL	CONDITION	MIN.	TYP.	MAX.	UNIT	NOTE
Contrast Ratio (5 Points)		CR	ϕ = 0, θ = 0 Normal Viewing Angle	200	300	-		(1), (2), (5)
Response Time at Ta	Rising	T_R		-	10	20	msec	(1), (3)
	Falling	T_F		-	30	50		
White luminance (5points)		$Y_{L,AVE}$		150	180	-	cd/m^2	(1), (4) at 6mA
Color Chromaticity (CIE)	Red	R_X		0.565	0.595	0.625		(1), (5) PR650
		R_Y		0.299	0.329	0.359		
	Green	G_X		0.290	0.320	0.350		
		G_Y		0.513	0.543	0.573		
	Blue	B_X		0.125	0.153	0.185		
		B_Y		0.100	0.130	0.165		
	White	W_X		0.285	0.315	0.345		
		W_Y		0.300	0.330	0.360		
Viewing Angle	Hor.	θ_L	CR(at center point) ≥ 10	40	45		Degrees	(1), (5)
		θ_R		40	45			
	Ver.	ϕ_H		10	15			
		ϕ_L		30	35	-		
13 Points White Variation		δ_L		-	-	1.8		(6)

Preliminary

Note 1) Definition of Viewing Angle :

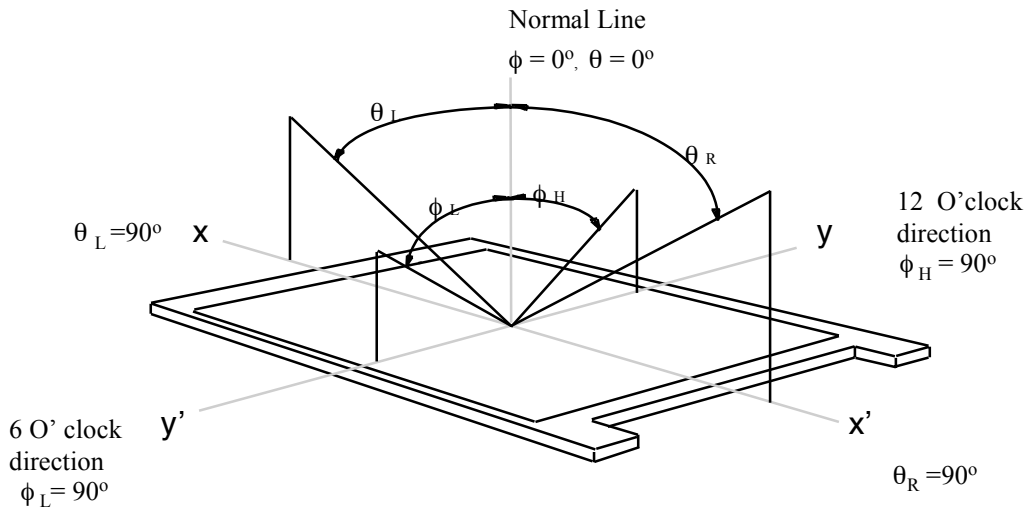

Note 2) Definition of Contrast Ratio (CR) :

$$CR = \frac{CR1 + CR2 + CR3 + CR4 + CR5}{5}$$

POINTS : (4) , (5) , (7) , (9) , (10) at FIGURE OF NOTE 6)

Note 3) Definition of Response time :

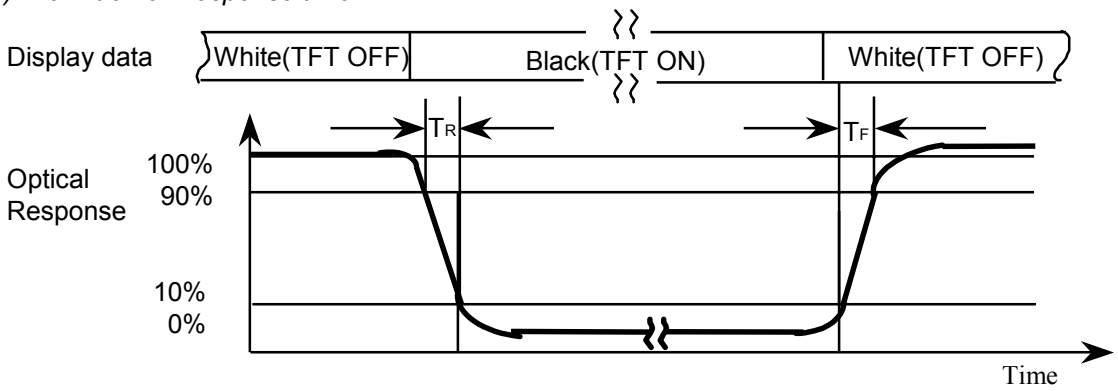

Note 4) Definition of Average Luminance of White : measure the luminance of white at 5 points.

Average Luminance of White ($Y_{L,AVE}$)

$$Y_{L,AVE} = \frac{Y_{L4} + Y_{L5} + Y_{L7} + Y_{L9} + Y_{L10}}{5}$$

POINTS : (4) , (5) , (7) , (9) , (10) at FIGURE OF NOTE 6)

Note 5) After stabilizing and leaving the panel alone at a given temperature for 30 minutes, the measurement should be executed. Measurement should be executed in a stable, windless,and dark room.
30 minutes after lighting the back-light. This should be measured in the center of screen.
Lamp current : 6.0 mA
Environment condition : Ta = 25 ± 2 °C 2

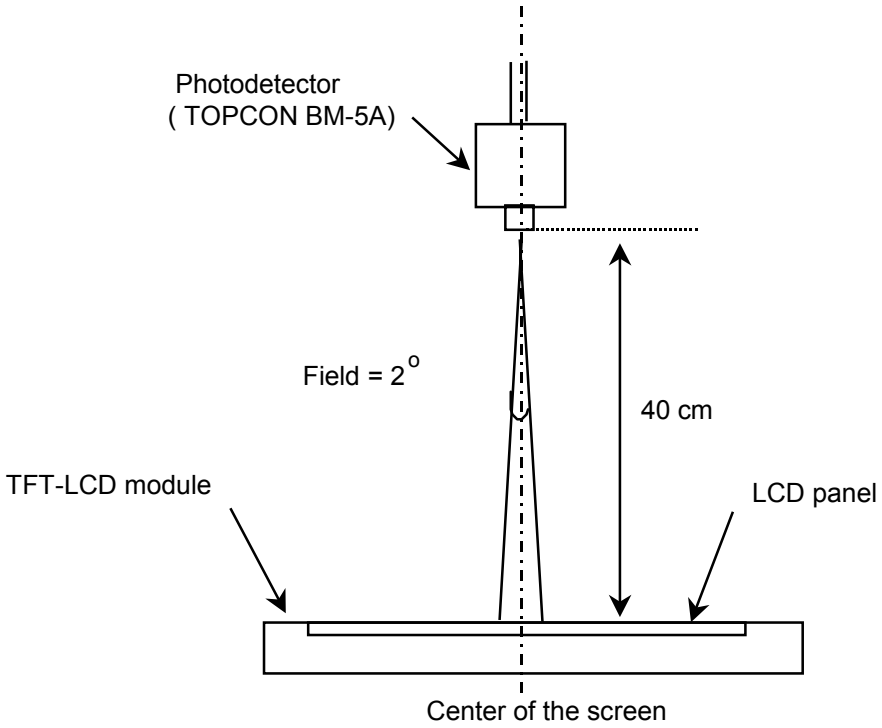

Optical characteristics measurement setup

Note 6) Definition of 13 points white variation (δ_W), CR variation(C_{VER}) [1 ~ 13]

$$\delta_L = \frac{\text{Maximum luminance of 13 points}}{\text{Minimum luminance of 13 points}} \qquad \delta C_R = \frac{\text{Maximum } C_R \text{ of 13 points}}{\text{Minimum } C_R \text{ of 13 points}}$$

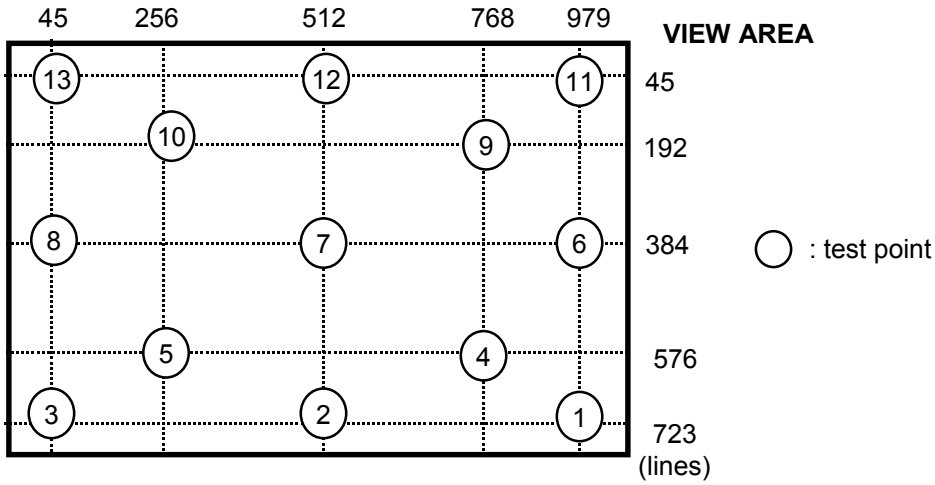

Preliminary

3. ELECTRICAL CHARACTERISTICS

3.1 TFT LCD MODULE

Ta = 25 ± 2. °C

ITEM		SYMBOL	MIN	TYP	MAX	UNIT	NOTE
Voltage of Power Supply		V_{DD}	3.0	3.3	3.6	V	
Differential Input Voltage for LVDS Receiver Threshold	High	V_{IH}	-	-	+100	mV	(1)
	Low	V_{IL}	-100	-	-	mV	
Vsync Frequency		fv	-	60	-	Hz	
Hsync Frequency		f_H	-	48.3	-	KHz	
Main Frequency		f_{DCLK}	63.4	65	66.6	MHz	
Rush Current		I_{RUSH}	-	-	1.5	A	(4)
Power Consumption of Electric Circuit	White Pattern	I_{DD}	-	280	-	mA	(2),(3)*a
	Mosaic Pattern		-	300	-	mA	(2),(3)*b
	Max. Pattern		-	370	420	mA	(2),(3)*c

Note (1) Condition : V_{CM}=+1.2V(Common mode Voltage)

(2) f_V=60Hz, f_{DCLK} =65MHZ, Vdd = 3.3V , DC Current.

(3) Power consumption check pattern

*a) White Pattern

*b)Mosaic Pattern

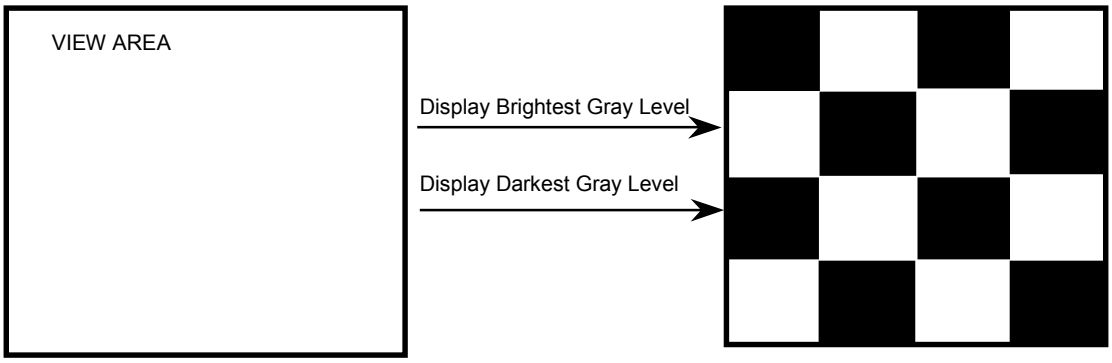

*c) Maximum power pattern :

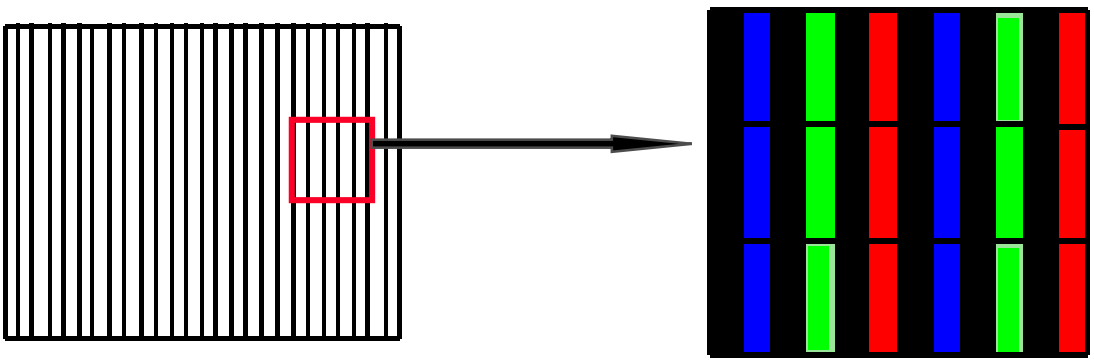

(4) Rush current measurement condition

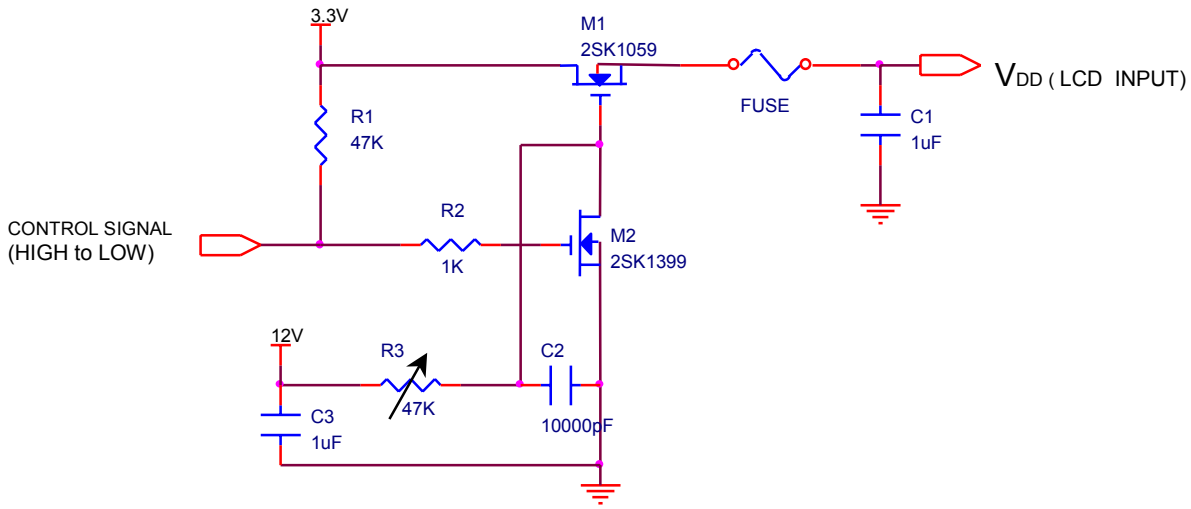

VDD rising time is 470us

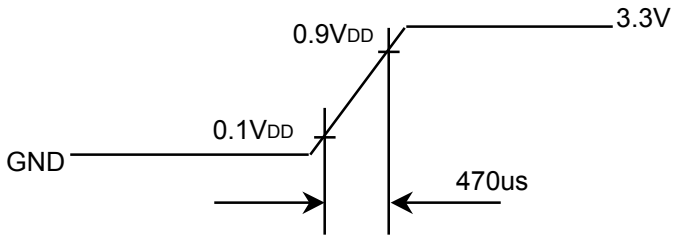

3.2 BACK-LIGHT UNIT

The backlight system is an edge - lighting type with a single CCFL (Cold Cathode Fluorescent Lamp).
The characteristics of a single lamp are shown in the following tables.
INVERTER : SIC130T(Frequency typ. 60kHz)

Ta = 25 ± 2°C

ITEM	SYMBOL	MIN	TYP	MAX	UNIT	NOTE
Lamp Current	I_L	3.0	-	6.0	mArms	(1)
Lamp Voltage	V_L		635		Vrms	I_L=6.0mA
Frequency	f_L	50	60	65	kHz	(2)
Power Consumption	P_L	-	3.8	-	W	(3)
Lamp Operating Life Time	Hr	10,000	-	-	Hour	(4)
Startup Voltage	V_S	-	-	1200 (25°C) 1400 (0 °C)	Vrms	(5)

Note) **The waveform of the inverter output voltage must be area symmetric and the design of the inverter must have specifications for the modularized lamp.**
The performance of the back-light, for example life time or brightness, is much influenced by the characteristics of the DC-AC inverter for the lamp. So all the parameters of an inverter should be carefully designed so as not to produce too much leakage current from high-voltage output of the inverter.
When you design or order the inverter, please make sure that a poor lighting caused by the mismatch of the back-light and the inverter(miss lighting, flicker, etc.) never occur. When you confirm it, the module should be operated in the same condition as it is installed in your instrument.

Note (1) Lamp current is measured with a high frequency current meter as shown below.

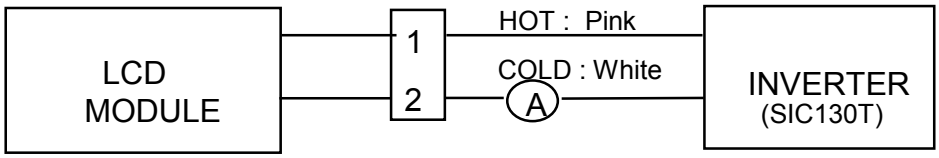

(2) Lamp frequency may produce interference with horizontal synchronous frequency and this may cause line flow on the display. Therefore lamp frequency should be detached from the horizontal synchronous frequency and its harmonics as far as possible in order to avoid interference.

(3) refer to I_L X V_L to calculate.

(4) Life time (Hr) of a lamp can be defined as the time in which it continues to operate under the condition Ta = 25 ± 2°C and I_L = 6.0 mArms until one of the following event occurs.
1. When the brightness becomes 50% or lower than it's original.
2. When the Effective ignition length becomes 80% or lower than it's original value.
(Effective ignition length is defined as an area that has less than 70% brightness compared to the brightness in the center point.)

(5) The voltage above this value should be applied to the lamp for more than 1 second to startup Otherwise the lamp may not be turned on.

4. BLOCK DIAGRAM

4.1 TFT LCD Module

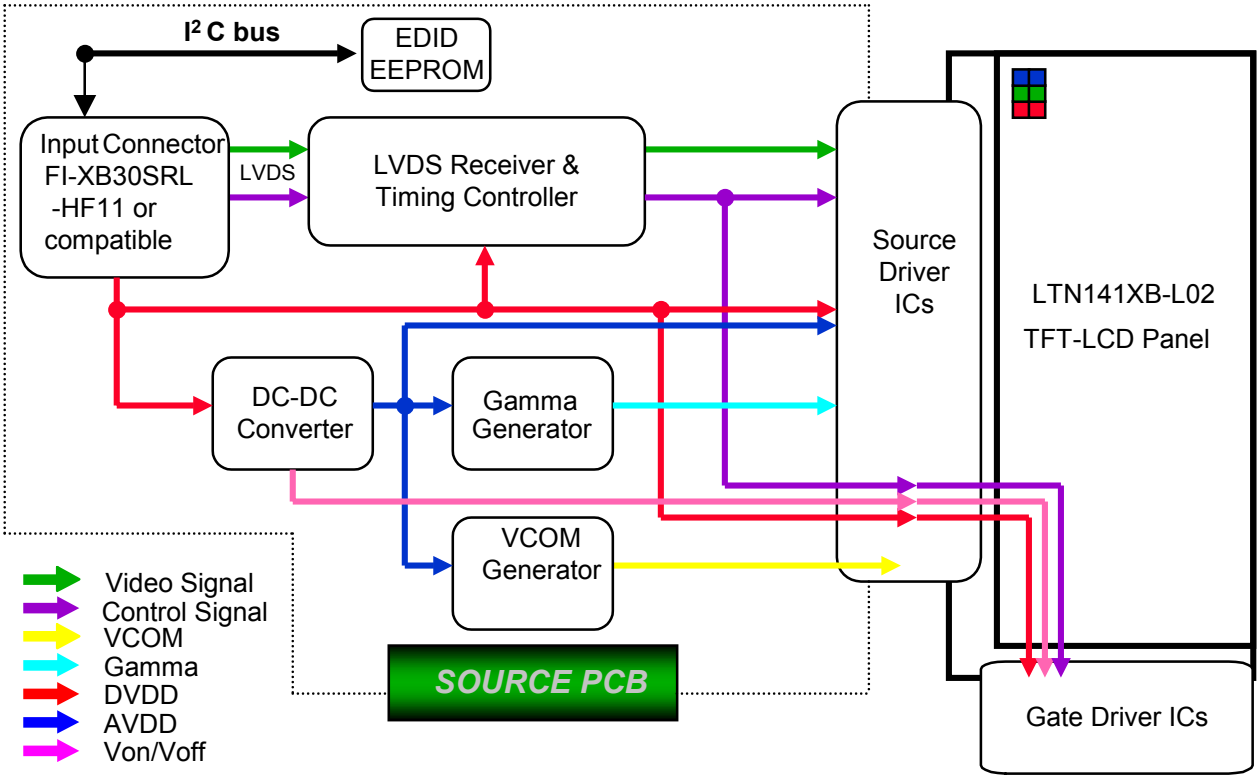

4.2 BACKLIGHT UNIT

Connector :JST BHSR-02VS-1

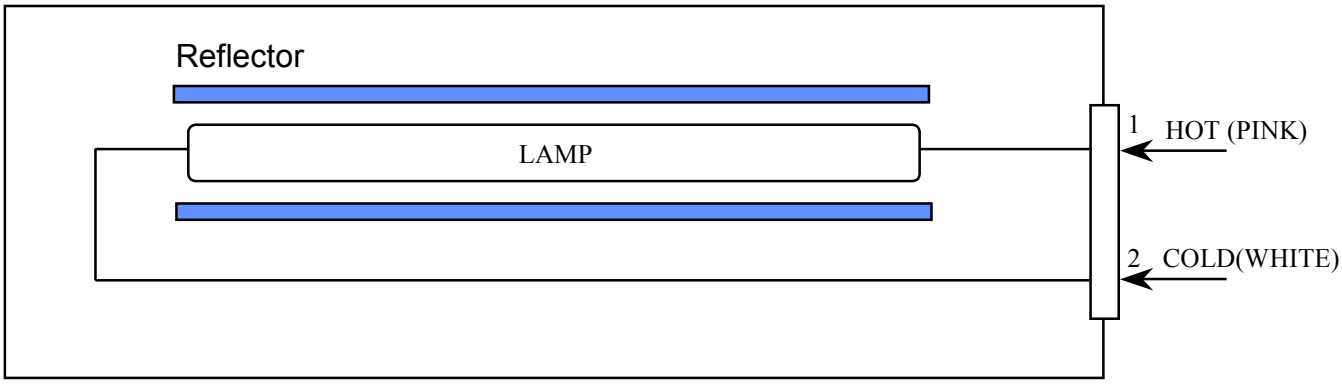

Note) The output of the inverter may change according to the material of the reflector.

5. INPUT TERMINAL PIN ASSIGNMENT

5.1. Input Signal & Power LVDS Connector : JAE FI-XB30SRL-HF11 *or compatible*
Mating Connector : JAE FI-X30CL or compatible

PIN NO	SYMBOL	FUNCTION	POLARITY	REMARK
1	VSS	Ground		
2	VDD	POWER SUPPLY +3.3V		
3	VDD	POWER SUPPLY +3.3V		
4	VEEDID	DDC 3.3V Power		
5	NC	No Connection		
6	CLKEDID	DDC Clock		
7	DATAEDID	DDC data		
8	RxIN0-	LVDS Differential Data INPUT (R0-R5,G0)	Negative	
9	RxIN0+	LVDS Differential Data INPUT (R0-R5,G0)	Positive	
10	VSS	Ground		
11	RxIN1-	LVDS Differential Data INPUT (G1-G5,B0-B1)	Negative	
12	RxIN1+	LVDS Differential Data INPUT (G1-G5,B0-B1)	Positive	
13	VSS	Ground		
14	RxIN2-	LVDS Differential Data INPUT (B1-B5,Sync,DE)	Negative	
15	RxIN2+	LVDS Differential Data INPUT (B1-B5,Sync,DE)	Positive	
16	VSS	Ground		
17	RxCLK-	LVDS Differential Data INPUT (Clock)	Negative	
18	RxCLK+	LVDS Differential Data INPUT (Clock)	Positive	
19	VSS	Ground		
20	NC	No Connection		
21	NC	No Connection		
22	NC	No Connection		
23	NC	No Connection		
24	NC	No Connection		
25	NC	No Connection		
26	NC	No Connection		
27	NC	No Connection		
28	NC	No Connection		
29	NC	No Connection		
30	NC	No Connection		

5.2 LVDS Interface : Transmitter SN75LVDS86 or Compatible

Pin No.	Name	RGB Signal	Pin No.	Name	RGB Signal
44	TxIN0	R0	12	TxIN11	G5
45	TxIN1	R1	13	TxIN12	B0
47	TxIN2	R2	15	TxIN13	B1
48	TxIN3	R3	16	TxIN14	B2
1	TxIN4	R4	18	TxIN15	B3
3	TxIN5	R5	19	TxIN16	B4
4	TxIN6	G0	20	TxIN17	B5
6	TxIN7	G1	22	TxIN18	Hsync
7	TxIN8	G2	23	TxIN19	Vsync
9	TxIN9	G3	25	TxIN20	DE
10	TxIN10	G4	26	TxCLK IN	Clock

LVDS INTERFACE

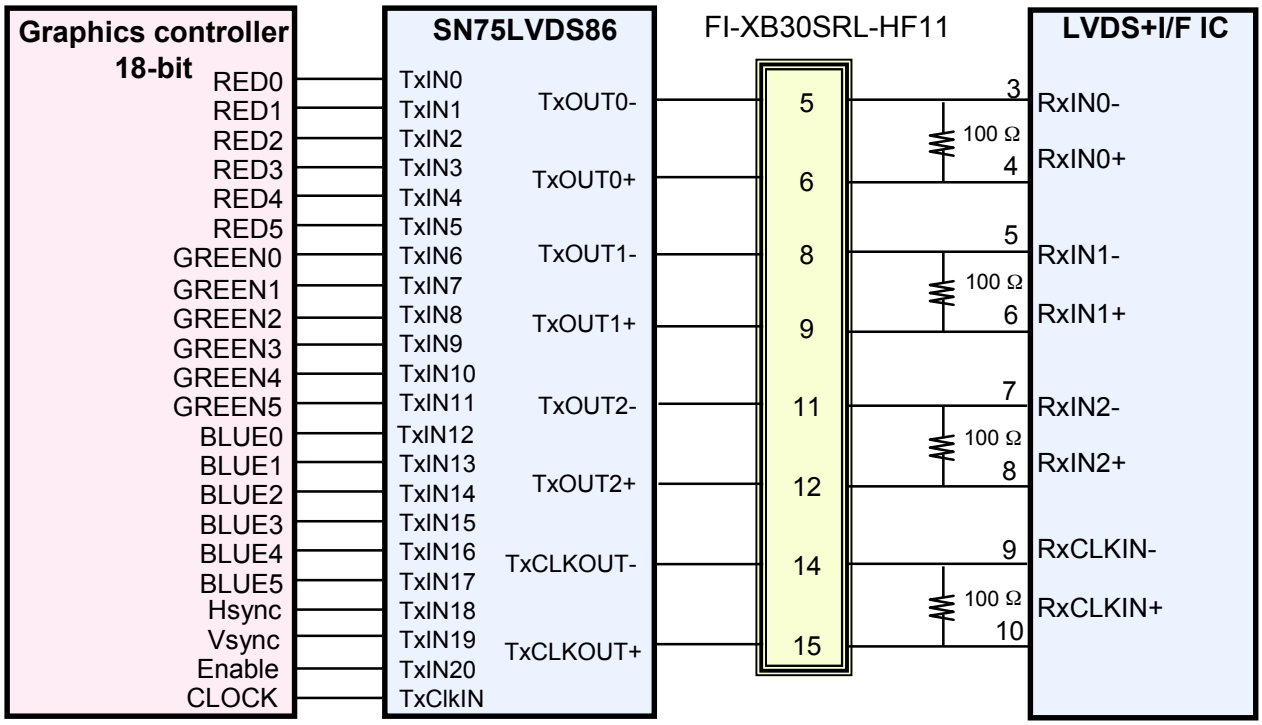

5.3 BACK LIGHT UNIT

Connector : JST BHSR - 02VS -1
Mating Connector : JST SM02B-BHSS-1

Pin NO.	Symbol	Color	Function
1	HOT	PINK	High Voltage
2	COLD	WHITE	Low Voltage

5.4 Timing Diagrams of LVDS For Transmission

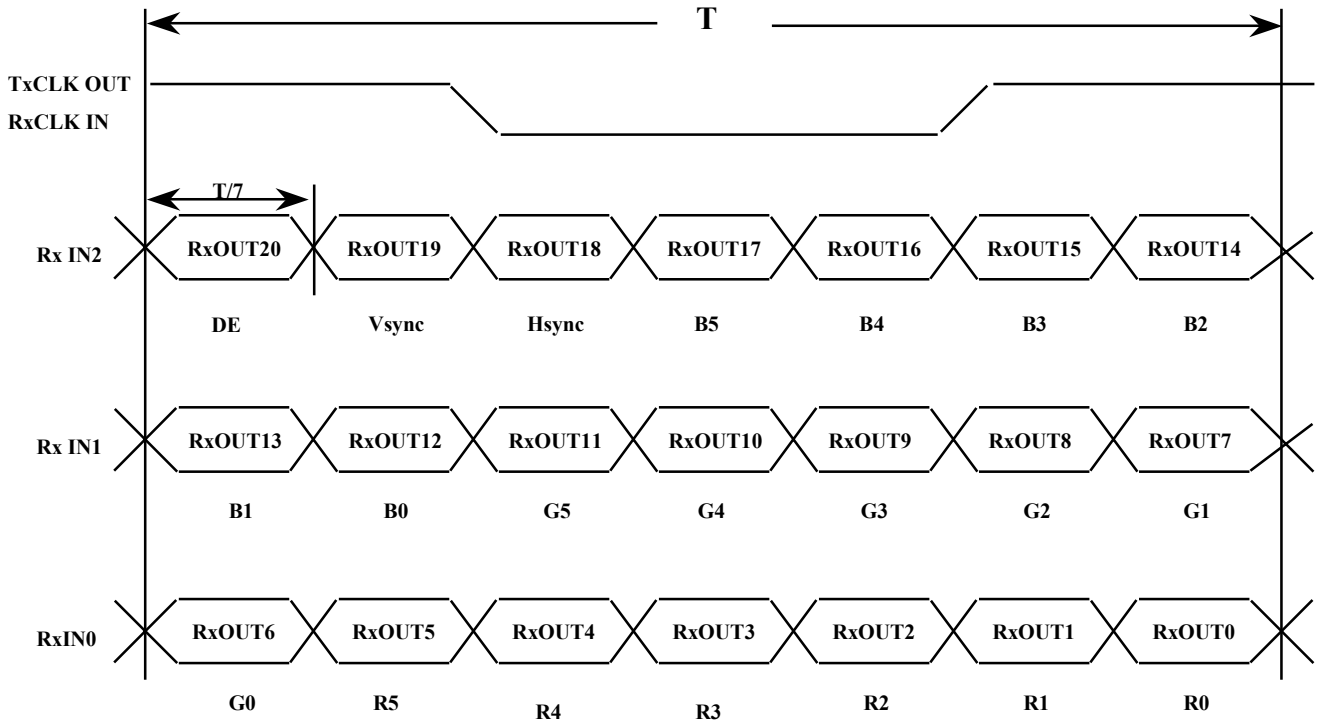

Preliminary

5.5 Input Signal,Basic Display Colors and Gray Scale of Each Colors

COLOR	DISPLAY	DATA SIGNAL																		GRAY SCALE LEVEL
		RED						GREEN						BLUE						
		R0	R1	R2	R3	R4	R5	G0	G1	G2	G3	G4	G5	B0	B1	B2	B3	B4	B5	
BASIC COLOR	BLACK	0	0	0	0	0	0	0	0	0	0	0	0	0	0	0	0	0	0	-
	BLUE	0	0	0	0	0	0	0	0	0	0	0	0	1	1	1	1	1	1	-
	GREEN	0	0	0	0	0	0	1	1	1	1	1	1	0	0	0	0	0	0	-
	CYAN	0	0	0	0	0	0	1	1	1	1	1	1	1	1	1	1	1	1	-
	RED	1	1	1	1	1	1	0	0	0	0	0	0	0	0	0	0	0	0	-
	MAGENTA	1	1	1	1	1	1	0	0	0	0	0	0	1	1	1	1	1	1	-
	YELLOW	1	1	1	1	1	1	1	1	1	1	1	1	0	0	0	0	0	0	-
	WHITE	1	1	1	1	1	1	1	1	1	1	1	1	1	1	1	1	1	1	-
GRAY SCALE OF RED	BLACK	0	0	0	0	0	0	0	0	0	0	0	0	0	0	0	0	0	0	R0
	DARK ↑	1	0	0	0	0	0	0	0	0	0	0	0	0	0	0	0	0	0	R1
		0	1	0	0	0	0	0	0	0	0	0	0	0	0	0	0	0	0	R2
		:	:	:	:	:	:	:	:	:	:	:	:	:	:	:	:	:	:	R3~R60
		:	:	:	:	:	:	:	:	:	:	:	:	:	:	:	:	:	:	
	↓ LIGHT	1	0	1	1	1	1	0	0	0	0	0	0	0	0	0	0	0	0	R61
		0	1	1	1	1	1	0	0	0	0	0	0	0	0	0	0	0	0	R62
	RED	1	1	1	1	1	1	0	0	0	0	0	0	0	0	0	0	0	0	R63
GRAY SCALE OF GREEN	BLACK	0	0	0	0	0	0	0	0	0	0	0	0	0	0	0	0	0	0	G0
	DARK ↑	0	0	0	0	0	0	1	0	0	0	0	0	0	0	0	0	0	0	G1
		0	0	0	0	0	0	0	1	0	0	0	0	0	0	0	0	0	0	G2
		:	:	:	:	:	:	:	:	:	:	:	:	:	:	:	:	:	:	G3~G60
		:	:	:	:	:	:	:	:	:	:	:	:	:	:	:	:	:	:	
	↓ LIGHT	0	0	0	0	0	0	1	0	1	1	1	1	0	0	0	0	0	0	G61
		0	0	0	0	0	0	0	1	1	1	1	1	0	0	0	0	0	0	G62
	GREEN	0	0	0	0	0	0	1	1	1	1	1	1	0	0	0	0	0	0	G63
GRAY SCALE OF BLUE	BLACK	0	0	0	0	0	0	0	0	0	0	0	0	0	0	0	0	0	0	B0
	DARK ↑	0	0	0	0	0	0	0	0	0	0	0	0	1	0	0	0	0	0	B1
		0	0	0	0	0	0	0	0	0	0	0	0	0	1	0	0	0	0	B2
		:	:	:	:	:	:	:	:	:	:	:	:	:	:	:	:	:	:	B3~B60
		:	:	:	:	:	:	:	:	:	:	:	:	:	:	:	:	:	:	
	↓ LIGHT	0	0	0	0	0	0	0	0	0	0	0	0	1	0	1	1	1	1	B61
		0	0	0	0	0	0	0	0	0	0	0	0	0	1	1	1	1	1	B62
	BLUE	0	0	0	0	0	0	0	0	0	0	0	0	1	1	1	1	1	1	B63

Note

(1) Definition of Gray : Rn : Red Gray, Gn : Green Gray, Bn : Blue Gray (n = Gray level)

(2) Input Signal : 0 = Low level voltage, 1 = High level voltage

Preliminary

5.6 PIXEL FORMAT

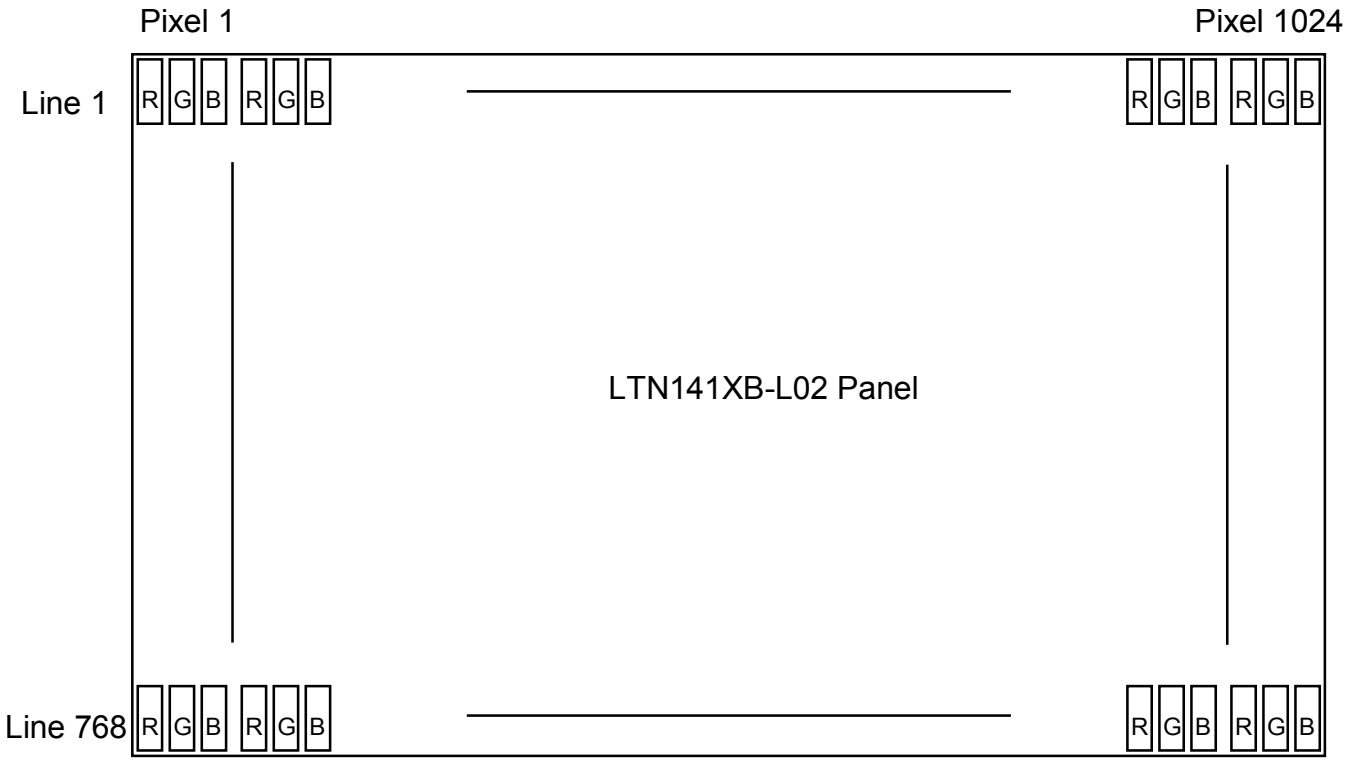

6. INTERFACE TIMING

6.1 Timing Parameters

Signal	Item	Symbol	MIN	TYP	MAX	Unit	Note
Frame Frequency	Cycle	T_V		806		lines	
Vertical Active Display Term	Display Period	T_{VD}		768		lines	
One Line Scanning Time	Cycle	T_H		1344		clocks	
Horizontal Active Display Term	Display Period	T_{HD}		1024		clocks	

6.2 Timing diagrams of interface signal

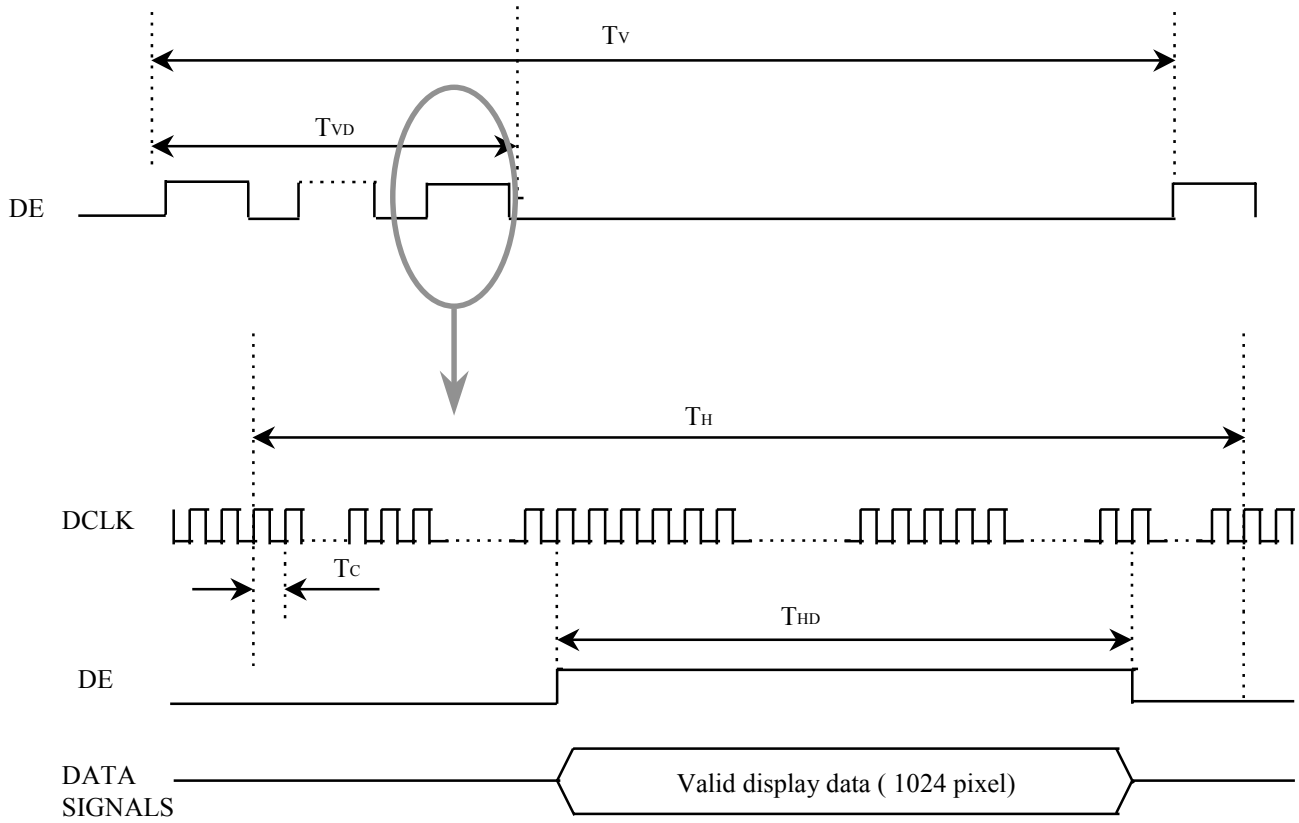

6.3 Power ON/OFF Sequence

: To prevent a latch-up or DC operation of the LCD module, the power on/off sequence shall be as shown below.

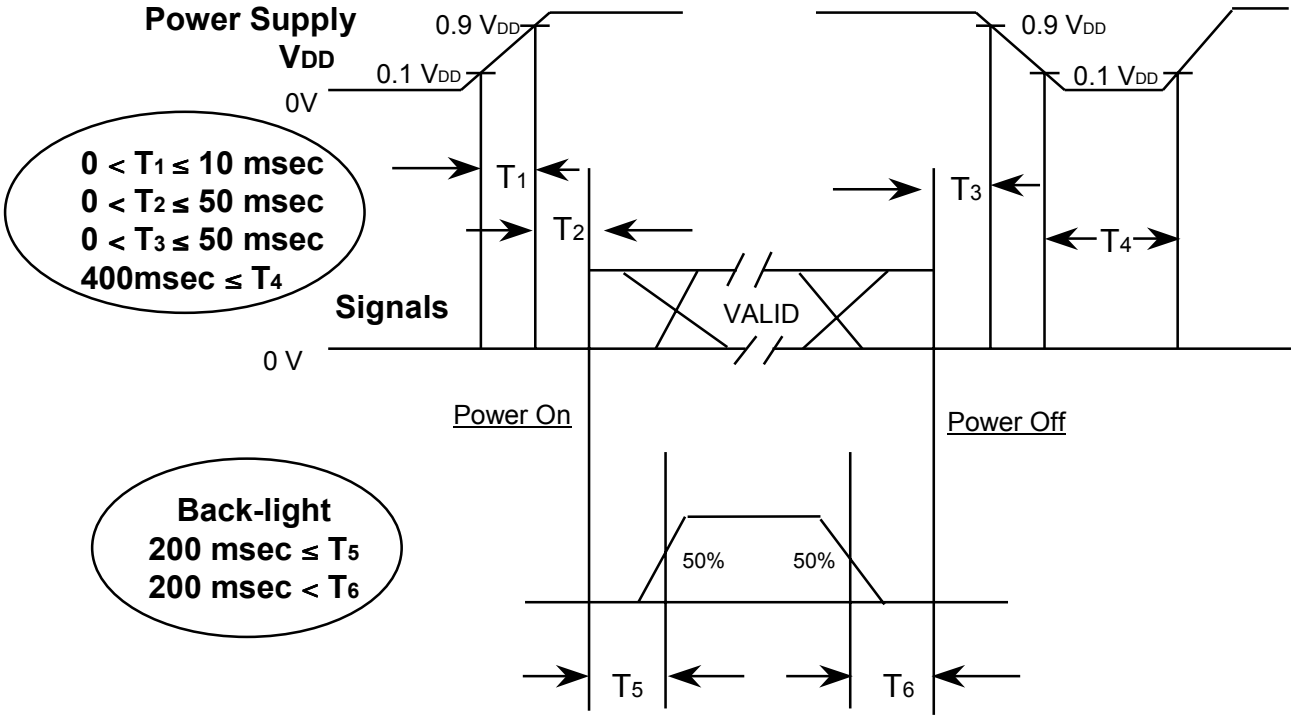

Power ON/OFF Sequence

T1 : Vdd rising time from 10% to 90%
T2 : The time from Vdd to valid data at power ON.
T3 : The time from valid data off to Vdd off at power Off.
T4 : Vdd off time for Windows restart
T5 : The time from valid data to B/L enable at power ON.
T6 : The time from valid data off to B/L disable at power Off.

NOTE.

(1) The supply voltage of the external system for the module input should be the same as the definition of V_{DD}.

(2) Apply the lamp voltage within the LCD operation range. When the backlight turns on before the LCD operation or the LCD turns off before the backlight turns off, the display may momentarily become white.

(3) In case of V_{DD} = off level, please keep the level of input signals on the low or keep a high impedance.

(4) T4 should be measured after the module has been fully discharged between power off and on period.

(5) Interface signal shall not be kept at high impedance when the power is on.

FILE NO.

NO	PART NAME	CODE NO	SPECIFICATION	Q'TY	WEIGHT FINISH	WEIGHT MATERIAL	UNFOLDED DIM. OF. MATERIAL	REMARK

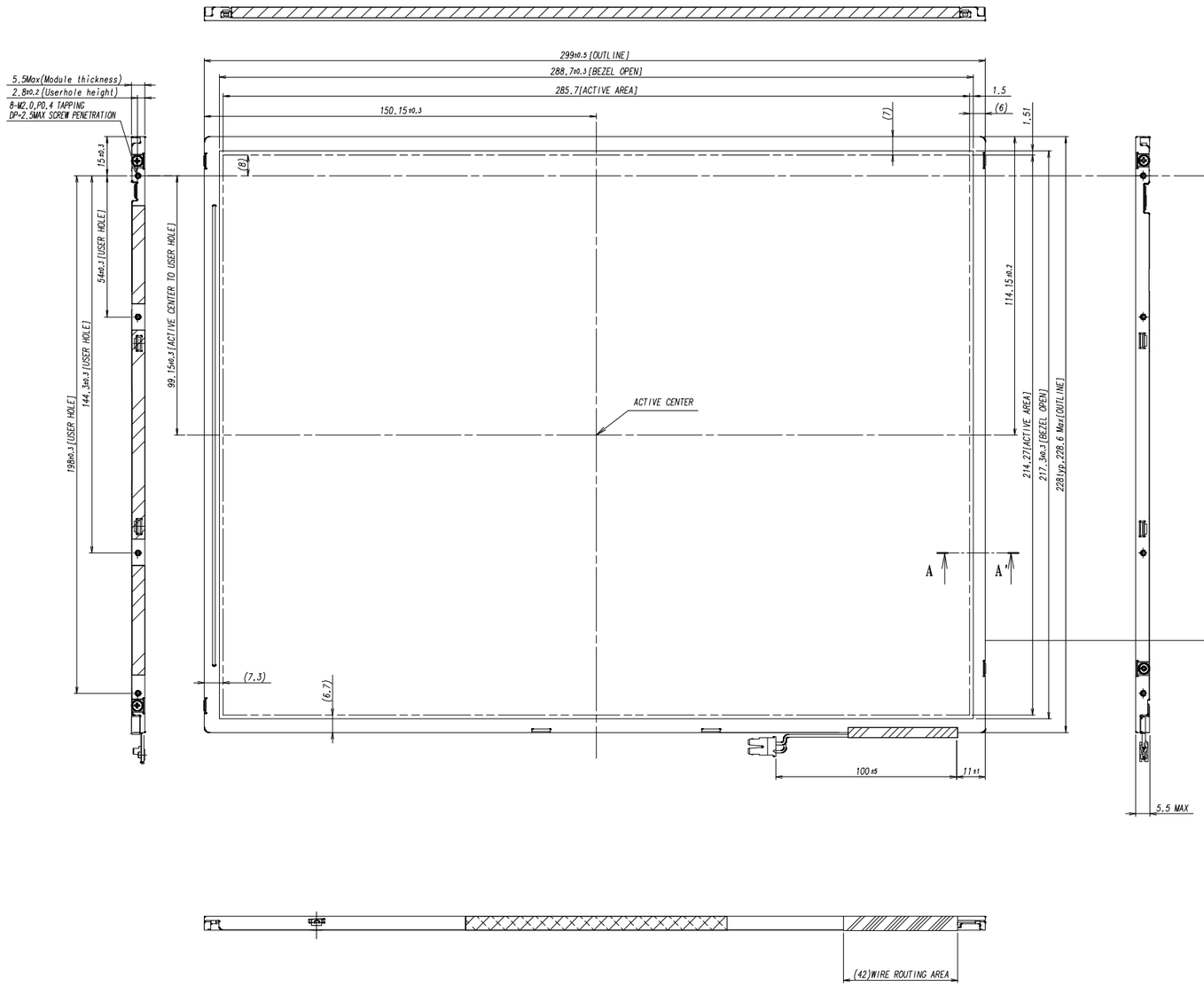

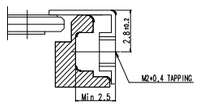

<USERHOLE PART>
SECTION A-A' (S=5/1)

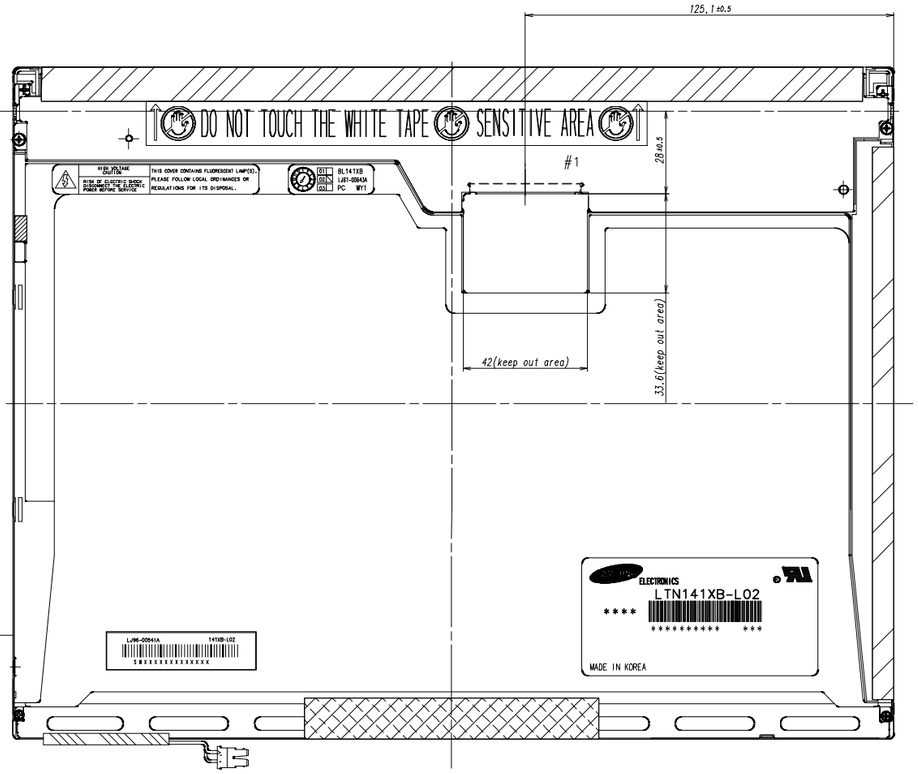

* NOTE

1. SIGNAL INTERFACE CONNECTOR TO BE SPECIFIED AS BELOW.
   - MAKER : JAE
   - INPUT MATCHING CONNECTOR : JAE FI-XB30SRL-HF11
2. CCFT CONNECTOR FOR BACKLIGHT TO BE SPECIFIED AS BELOW.
   - MAKER : JST
   - PART NO : BHSR-02VS-1
   - LAMP DIAMETER : ø1.8
3. CALIFERS MEASURING FORCE :530 ± 150 gf
4. ALLOWED DEPTH OF USERHOLE SCREW INSERTION IS 2.5mm MAX

REVISION

GENERAL TOLERANCE			
STEP	LEVEL 1	LEVEL 2	LEVEL 3
0 < X ≤ 4	±0.05	±0.1	±0.2
4 < X ≤ 16	±0.08	±0.15	±0.3
16 < X ≤ 64	±0.12	±0.25	±0.5
64 < X ≤ 256	±0.25	±0.4	±0.8

REV	DATE	DESCRIPTION OF REVISION				REASON	CHG'D BY
UNIT	mm	DRA'N BY	DES'D BY	CHK'D BY	APP'D BY		
SCALE	1/1		S.H.PARK	S.H.LEE	Y.B.CHU	MODEL NAME: LTN141XB-L02	
TOLERANCE LEVEL 3			02.06.10	02.06.11	02.06.12	PART/SHEET NAME: OUTLINE DIMENSION	SHEET 1/1
SAMSUNG ELECTRONICS					SPEC. NO	CODE NO.	VER.

8. GENERAL PRECAUTIONS

Preliminary

1. Handling

(a) When the module is assembled, It should be attached to the system firmly using every mounting holes. Be careful not to twist and bend the modules.

(b) Refrain from strong mechanical shock and / or any force to the module. In addition to damage, this may cause improper operation or damage to the module and CCFT back-light.

(c) Note that polarizers are very fragile and could be easily damaged. Do not press or scratch the surface harder than a HB pencil lead.

(d) Wipe off water droplets or oil immediately. If you leave the droplets for a long time, Staining and discoloration may occur.

(e) If the surface of the polarizer is dirty, clean it using some absorbent cotton or soft cloth.

(f) The desirable cleaners are water, IPA(Isoprophyl Alcohol) or Hexane.
Do not use Ketone type materials(ex. Acetone), Ethyl alcohol, Toluene, Ethyl acid or Methyl chloride. It might permanent damage to the polarizer due to chemical reaction.

(g) If the liquid crystal material leaks from the panel, it should be kept away from the eyes or mouth . In case of contact with hands, legs or clothes, it must be washed away thoroughly with soap.

(h) Protect the module from static , it may cause damage to the C-MOS Gate Array IC.

(i) Use fingerstalls with soft gloves in order to keep display clean during the incoming inspection and assembly process.

(j) Do not disassemble the module.

(k) Do not pull or fold the lamp wire.

(l) Do not adjust the variable resistor which is located on the back side.

(m) Protection film for polarizer on the module shall be slowly peeled off just before use so that the electrostatic charge can be minimized.

(n) Pins of I/F connector shall not be touched directly with bare hands.

2. STORAGE

(a) Do not leave the module in high temperature, and high humidity for a long time. It is highly recommended to store the module with temperature from 0 to 35 °C and relative humidity of less than 70%.

(b) Do not store the TFT-LCD module in direct sunlight.

(c) The module shall be stored in a dark place. It is prohibited to apply sunlight or fluorescent light during the store.

3. OPERATION

(a) Do not connect,disconnect the module in the " Power On" condition.

(b) Power supply should always be turned on/off by following item 6.3 " Power on/off sequence ".

(c) Module has high frequency circuits. Sufficient suppression to the electromagnetic interference shall be done by system manufacturers. Grounding and shielding methods may be important to minimize the interference.

(d) The cable between the back-light connector and its inverter power supply shall be a minimized length and be connected directly . The longer cable between the back-light and the inverter may cause lower luminance of lamp(CCFL) and may require higher startup voltage(Vs).

4. OTHERS

(a) Ultra-violet ray filter is necessary for outdoor operation.

(b) Avoid condensation of water. It may result in improper operation or disconnection of electrode.

(c) Do not exceed the absolute maximum rating value. (the supply voltage variation, input voltage variation, variation in part contents and environmental temperature, so on) Otherwise the module may be damaged.

(d) If the module displays the same pattern continuously for a long period of time,it can be the situation when the image "sticks" to the screen.

(e) This module has its circuitry PCB's on the rear side and should be handled carefully in order not to be stressed.