SPECIFICATION
FOR
APPROVAL

( ) **Preliminary Specification**
(◆) **Final Specification**

Title	15.6” Full HD TFT LCD

Customer	
MODEL	

SUPPLIER	LG Display Co., Ltd.
*MODEL	LP156WF4
Suffix	SLB1

*When you obtain standard approval,
please use the above model name without suffix

APPROVED BY	SIGNATURE
/	
/	
/	

Please return 1 copy for your confirmation with your signature and comments.

APPROVED BY	SIGNATURE
S.R.Kim / S.Manager	
REVIEWED BY	
N.J.Seong / Manager	
PREPARED BY	
S. S. Han / Engineer D. H. Kim / Engineer	

Products Engineering Dept.
LG Display Co., Ltd

Contents

No	ITEM	Page
	COVER	1
	CONTENTS	2
	RECORD OF REVISIONS	3
1	GENERAL DESCRIPTION	4
2	ABSOLUTE MAXIMUM RATINGS	5
3	ELECTRICAL SPECIFICATIONS	
3-1	ELECTRICAL CHARACTREISTICS	6-7
3-2	INTERFACE CONNECTIONS	8
3-3	LVDS SIGNAL TIMING SPECIFICATION	9-10
3-4	SIGNAL TIMING SPECIFICATIONS	11~12
3-5	SIGNAL TIMING WAVEFORMS	12
3-6	COLOR INPUT DATA REFERNECE	13
3-7	POWER SEQUENCE	14
4	OPTICAL SFECIFICATIONS	15-17
5	MECHANICAL CHARACTERISTICS	18-20
6	RELIABLITY	21
7	INTERNATIONAL STANDARDS	
7-1	SAFETY	22
7-2	EMC	22
7-3	Environment	22
8	PACKING	
8-1	DESIGNATION OF LOT MARK	23
8-2	PACKING FORM	23
9	PRECAUTIONS	24-25
A	APPENDIX. Enhanced Extended Display Identification Data	26-28

RECORD OF REVISIONS

Revision No	Revision Date	Page	Description	EDID ver
0.0	May 03. 2011	-	First Draft (Preliminary Specification)	-
0.1	Jun. 20. 2011	4, 6	Update the Electrical Characteristics. (Power Consumption)	0.1
		11	Change the Signal Timing Spec. (DCLK Min. 70.3 → 68.6Mhz)	
		14	Change the Power Sequence (T7 Max. 10 → 200ms)	
		15	Change the Optical Spec. (Luminance Min. 215 → 210nit)	
			Update the Optical Spec. (R, G, B Color Coordinates)	
		16	Update the Gray Scale Spec.	
		26~28	Update the EDID data	
1.0	Jul. 21. 2011	-	Final Specification	1.0

1. General Description

The LP156WF4 is a Color Active Matrix Liquid Crystal Display with an integral LED backlight system. The matrix employs a-Si Thin Film Transistor as the active element. It is a transmissive type display operating in the normally white mode. This TFT-LCD has 15.5 inches diagonally measured active display area with FHD resolution (1920 horizontal by 1080 vertical pixel array). Each pixel is divided into Red, Green and Blue sub-pixels or dots which are arranged in vertical stripes. Gray scale or the brightness of the sub-pixel color is determined with a 6-bit gray scale signal for each dot, thus, presenting a palette of more than 262,144 colors. The LP156WF4 has been designed to apply the interface method that enables low power, high speed, low EMI. The LP156WF4 is intended to support applications where thin thickness, low power are critical factors and graphic displays are important. In combination with the vertical arrangement of the sub-pixels, the LP156WF4 characteristics provide an excellent flat display for office automation products such as Notebook PC.

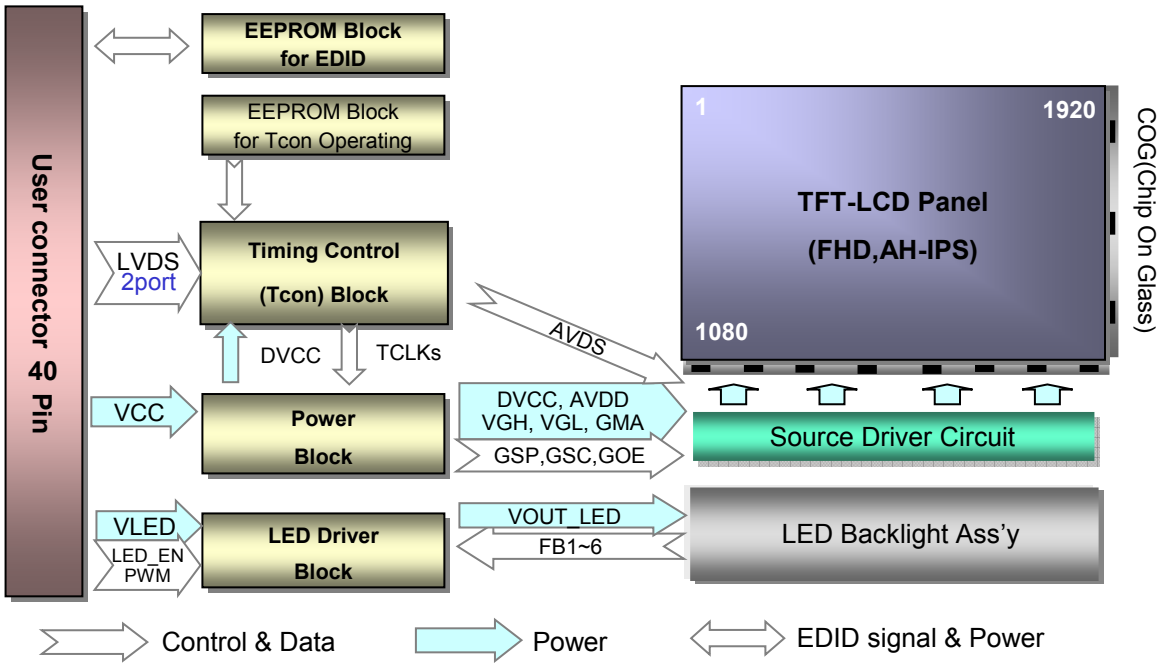

General Features

Active Screen Size	15.6 inches diagonal
Outline Dimension	359.5(H, typ.) × 207.7(V, typ.) × 3.4(D,max) [mm] (with PCB Board)
Pixel Pitch	0.17925 mm x 0.17925 mm
Pixel Format	1920 horiz. By 1080 vert. Pixels RGB strip arrangement
Color Depth	6-bit, 262,144 colors
Luminance, White	250 cd/m^2(Typ.5 point)
Power Consumption	Total 6.0 W(Typ.) Logic : 1.5 W (Typ.@ColorBar), B/L : 4.5 W (Typ.@VLED12V)
Weight	330g (Max.) / 320g (Typ.)
Display Operating Mode	Normally Black
Surface Treatment	Anti glare treatment (3H) of the front Polarizer
RoHS Compliance	Yes
BFR / PVC / As Free	Yes for all

2. Absolute Maximum Ratings

The following are maximum values which, if exceeded, may cause faulty operation or damage to the unit.

Table 1. ABSOLUTE MAXIMUM RATINGS

Parameter	Symbol	Values		Units	Notes
		Min	Max		
Power Input Voltage	VCC	-0.3	4.0	Vdc	at 25 ± 5°C
Operating Temperature	TOP	0	50	°C	1
Storage Temperature	HST	-20	60	°C	1
Operating Ambient Humidity	HOP	10	90	%RH	1
Storage Humidity	HST	10	90	%RH	1

Note : 1. Temperature and relative humidity range are shown in the figure below.
Wet bulb temperature should be 39°C Max, and no condensation of water.
Note : 2. Storage Condition is guaranteed under packing condition.

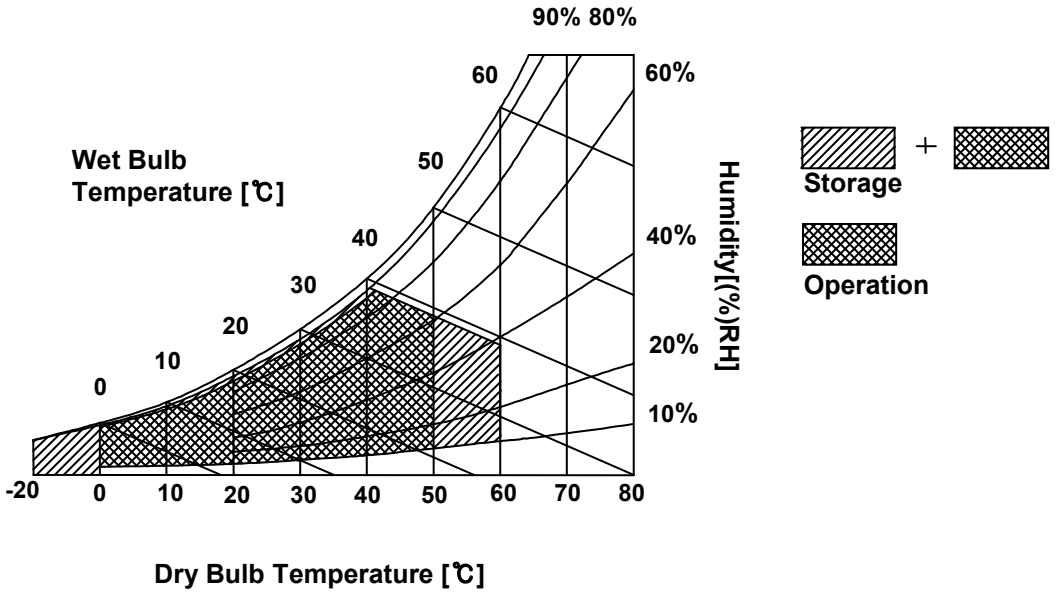

3. Electrical Specifications

3-1. Electrical Characteristics

The LP156WF4 requires two power inputs. The first logic is employed to power the LCD electronics and to drive the TFT array and liquid crystal. The second backlight is the input about LED BL with LED Driver.

Table 2. ELECTRICAL CHARACTERISTICS

Parameter		Symbol	Values			Unit	Notes
			Min	Typ	Max		
LOGIC :							
Power Supply Input Voltage		V_{CC}	3.0	3.3	3.6	V	1
Power Supply Input Current	Color Bar	I_{CC}	-	445	515	mA	2
	White	I_{CC}	-	610	705	mA	
Power Consumption	Color Bar	P_{CC}	-	1.5	1.7	W	2
Power Supply Inrush Current		I_{CC_P}	-	-	1500	mA	3
LVDS Impedance		Z_{LVDS}	90	100	110	Ω	4
BACKLIGHT : (with LED Driver)							
LED Power Input Voltage		V_{LED}	7.0	12.0	21.0	V	5
LED Power Input Current		I_{LED}	-	378	430	mA	6
LED Power Consumption		P_{LED}	-	4.5	4.8	W	6
LED Power Inrush Current		I_{LED_P}	-	-	1500	mA	7
PWM Duty Ratio			5	-	100	%	8
PWM Jitter		-	0	-	0.2	%	9
PWM Impedance		Z_{PWM}	20	40	60	kΩ	
PWM Frequency		F_{PWM}	200	-	1000	Hz	10
PWM High Level Voltage		V_{PWM_H}	3.0	-	5.3	V	
PWM Low Level Voltage		V_{PWM_L}	0	-	0.3	V	
LED_EN Impedance		Z_{PWM}	20	40	60	kΩ	
LED_EN High Voltage		$V_{LED_EN_H}$	3.0	-	5.3	V	
LED_EN Low Voltage		$V_{LED_EN_L}$	0	-	0.3	V	
Life Time			12,000	-	-	Hrs	11

Note)

1. The measuring position is the connector of LCM and the test conditions are under 25℃, fv = 60Hz, Black pattern.
2. The specified Icc current and power consumption are under the Vcc = 3.3V , 25℃, fv = 60Hz condition and Color Bar / White pattern.

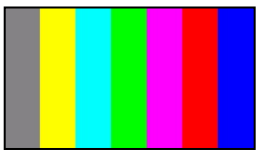

[Color Bar pattern]

[White pattern]

3. This Spec. is the max load condition for the cable impedance designing.
4. The below figures are the measuring Vcc condition and the Vcc control block LGD used. The Vcc condition is same as the minimum of T1 at Power on sequence.

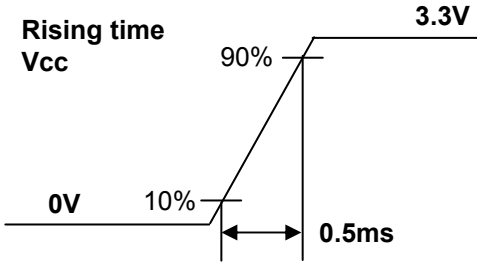

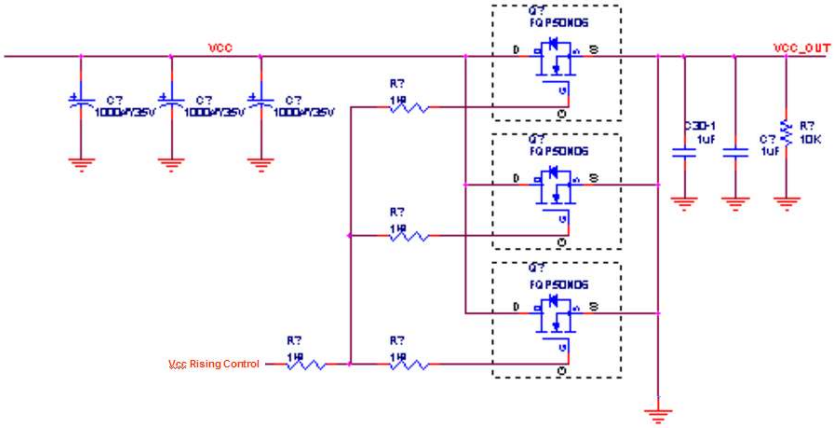

5. This impedance value is needed for proper display and measured form LVDS Tx to the mating connector.
6. The measuring position is the connector of LCM and the test conditions are under 25℃.
7. The current and power consumption with LED Driver are under the Vled = 12.0V , 25℃, Dimming of Max luminance and White pattern with the normal frame frequency operated(60Hz).
8. The below figures are the measuring Vled condition and the Vled control block LGD used. VLED control block is same with Vcc control block.

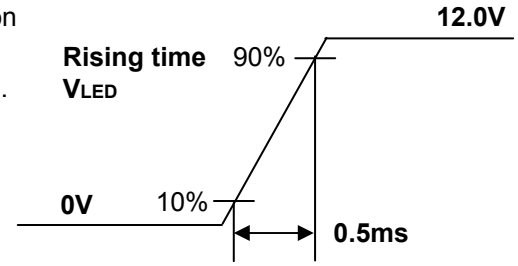

9. The operation of LED Driver below minimum dimming ratio may cause flickering or reliability issue.
10. If Jitter of PWM is bigger than maximum, it may induce flickering.
11. This Spec. is not effective at 100% dimming ratio as an exception because it has DC level equivalent to 0Hz. In spite of acceptable range as defined, the PWM Frequency should be fixed and stable for more consistent brightness control at any specific level desired.
12. The life time is determined as the time at which brightness of LCD is 50% compare to that of minimum value specified in table 7. under general user condition.

3-2. Interface Connections

This LCD employs two interface connections, a 40 pin connector used for the module electronics interface and the other connector used for the integral backlight system.

Table 3. MODULE CONNECTOR PIN CONFIGURATION (CN1)

Pin	Symbol	Description	Notes
1	VCC	LCD Logic and driver power (3.3V Typ.)	**[Interface Chip]** 1. LCD : SiW, SW0636A (LCD Controller) Including LVDS Receiver. 2. System : SiW LVDSRx or equivalent * Pin to Pin compatible with LVDS **[Connector]** UJU IS050-L40B-C10 LSMtron GT05Q-40S-H10 or equivalent **[Mating Connector]** 20345-#40E-## series or equivalent **[Connector pin arrangement]** 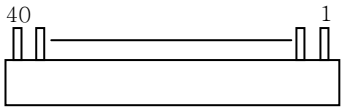 [LCD Module Rear View]
2	VCC	LCD Logic and driver power (3.3V Typ.)	
3	VCC	LCD Logic and driver power (3.3V Typ.)	
4	V EEDID	DDC Power (3.3V)	
5	NC	No Connection	
6	Clk EEDID	DDC Clock	
7	DATA EEDID	DDC Data	
8	ORX0-	Negative LVDS differential data input	
9	ORX0+	Positive LVDS differential data input	
10	GND	High Speed Ground	
11	ORX1-	Negative LVDS differential data input	
12	ORX1+	Positive LVDS differential data input	
13	GND	High Speed Ground	
14	ORX2-	Negative LVDS differential data input	
15	ORX2+	Positive LVDS differential data input	
16	GND	High Speed Ground	
17	ORXC-	Negative LVDS differential clock input	
18	ORXC+	Positive LVDS differential clock input	
19	GND	High Speed Ground	
20	ERX0-	Negative LVDS differential data input	
21	ERX0+	Positive LVDS differential data input	
19	GND	High Speed Ground	
23	ERX1-	Negative LVDS differential data input	
24	ERX1+	Positive LVDS differential data input	
19	GND	High Speed Ground	
26	ERX2-	Negative LVDS differential data input	
27	ERX2+	Positive LVDS differential data input	
19	GND	High Speed Ground	
29	ERXC-	Negative LVDS differential clock input	
30	ERXC+	Positive LVDS differential clock input	
31	GND	LED Backlight Ground	
32	GND	LED Backlight Ground	
33	GND	LED Backlight Ground	
34	NC	No Connection	
35	PWM	System PWM Signal input for dimming	
36	LED_EN	LED Backlight On/Off	
37	NC	No Connection	
38	VLED	LED Backlight Power (7V-21V)	
39	VLED	LED Backlight Power (7V-21V)	
40	VLED	LED Backlight Power (7V-21V)	

3-3. LVDS Signal Timing Specifications

3-3-1. DC Specification

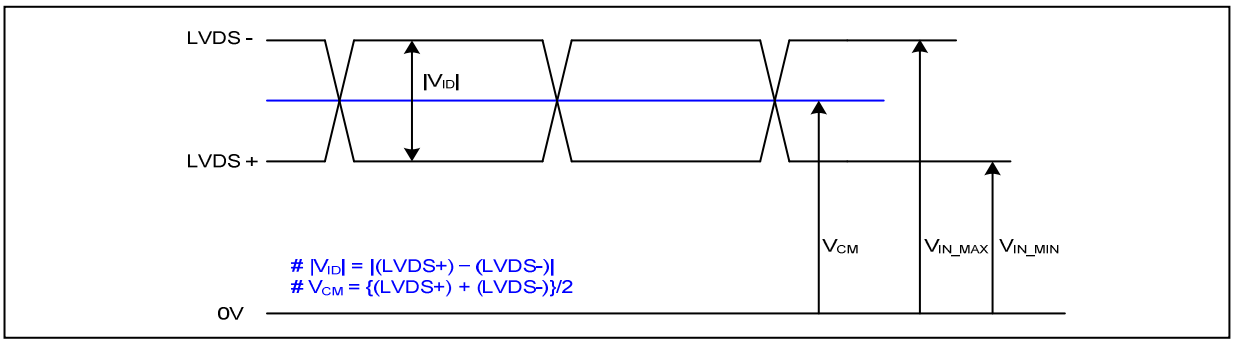

Description	Symbol	Min	Max	Unit	Notes
LVDS Differential Voltage	$\|V_{ID}\|$	100	600	mV	-
LVDS Common mode Voltage	V_{CM}	0.6	1.8	V	-
LVDS Input Voltage Range	V_{IN}	0.3	2.1	V	-

3-3-2. AC Specification

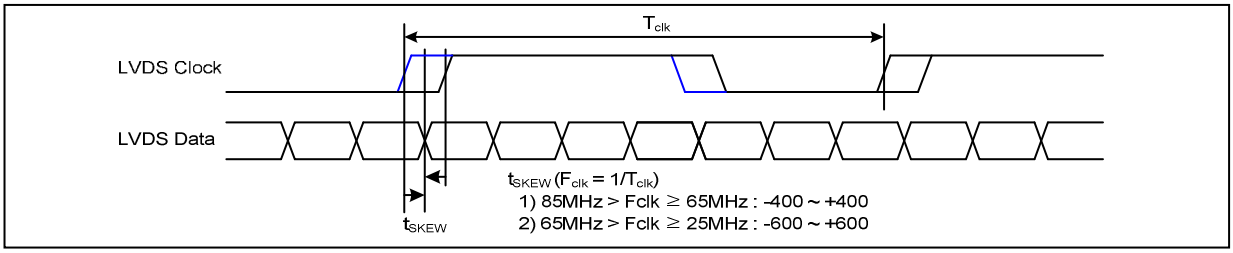

Description	Symbol	Min	Max	Unit	Notes
LVDS Clock to Data Skew Margin	t_{SKEW}	- 400	+ 400	ps	85MHz > Fclk ≥ 65MHz
	t_{SKEW}	- 600	+ 600	ps	65MHz > Fclk ≥ 25MHz
LVDS Clock to Clock Skew Margin (Even to Odd)	t_{SKEW_EO}	- 1/7	+ 1/7	T_{clk}	-
Maximum deviation of input clock frequency during SSC	F_{DEV}	-	± 3	%	-
Maximum modulation frequency of input clock during SSC	F_{MOD}	-	200	KHz	-

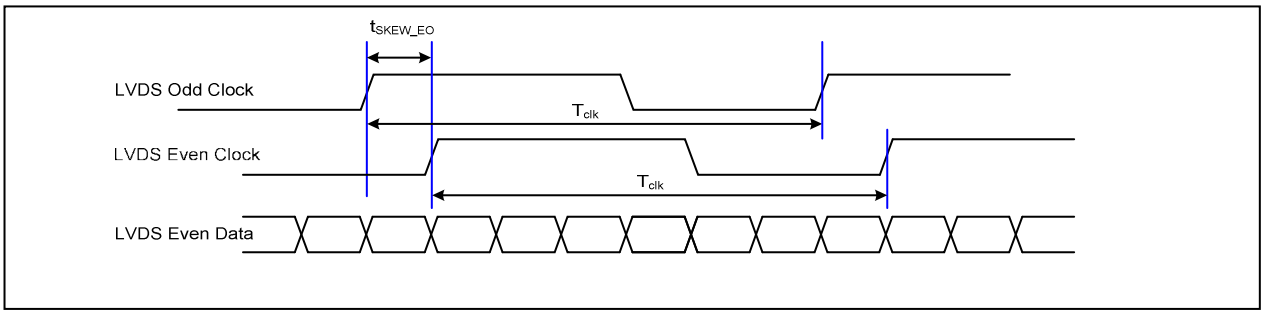

< Clock skew margin between channel >

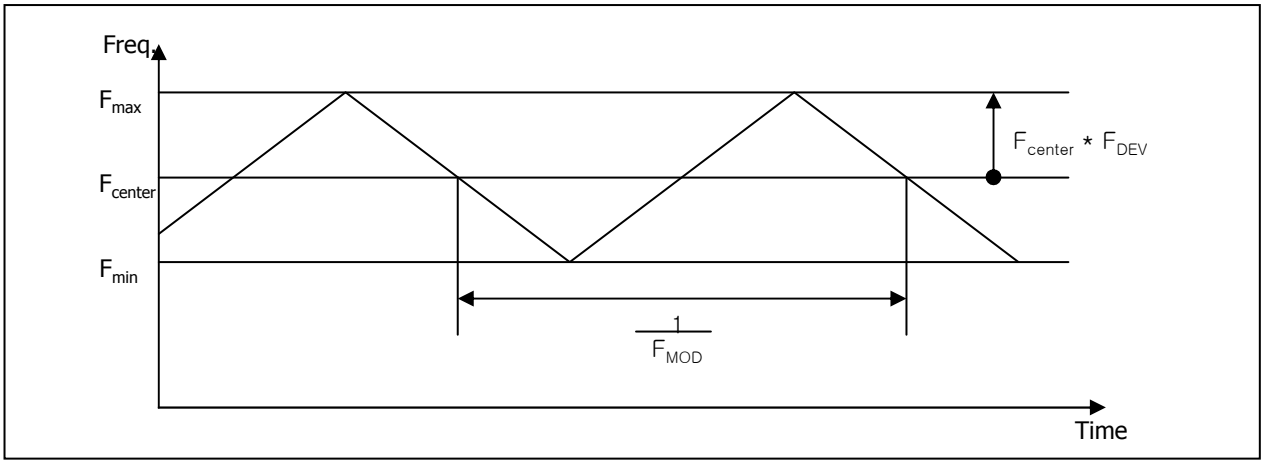

< Spread Spectrum >

3-3-3. Data Format

1) LVDS 2 Port

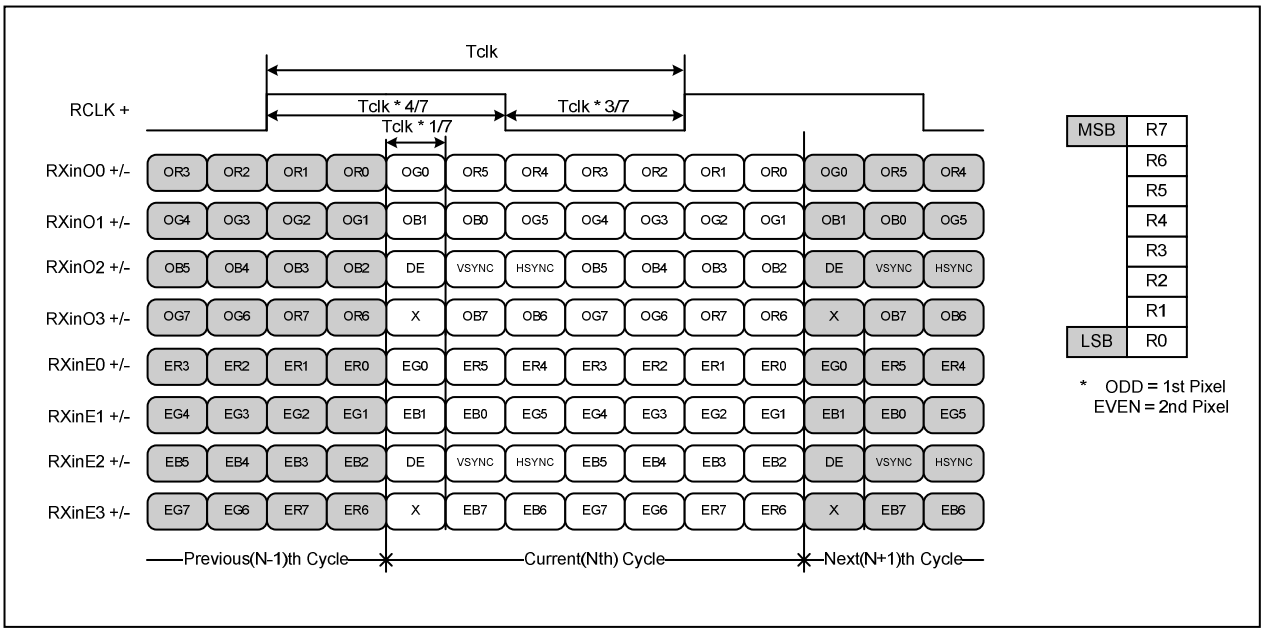

< LVDS Data Format >

3-4. Signal Timing Specifications

This is the signal timing required at the input of the User connector. All of the interface signal timing should be satisfied with the following specifications and specifications of LVDS Tx/Rx for its proper operation.

Table 4. TIMING TABLE

ITEM	Symbol		Min	Typ	Max	Unit	Note
DCLK	Frequency	f_{CLK}	68.6	72.1	74.1	MHz	LVDS 2 port (60Hz)
Hsync	Period	t_{HP}	1032	1074	1108	tCLK	
	Width	t_{WH}	32	36	36		
	Width-Active	t_{WHA}	960	960	960		
Vsync	Period	t_{VP}	1108	1120	1132	tHP	
	Width	t_{WV}	5	5	5		
	Width-Active	t_{WVA}	1080	1080	1080		
Data Enable	Horizontal back porch	t_{HBP}	24	54	60	tCLK	
	Horizontal front porch	t_{HFP}	16	24	52		
	Vertical back porch	t_{VBP}	20	32	38	tHP	
	Vertical front porch	t_{VFP}	3	3	9		

* Tentative Timing Table for 50Hz Refresh Rate (Note 1)

ITEM	Symbol		Min	Typ	Max	Unit	Note
DCLK	Frequency	f_{CLK}	68.6	72.1	74.1	MHz	LVDS 2 port (50Hz)
Hsync	Period	t_{HP}	1176	1200	1226	tCLK	
	Width	t_{WH}	36	36	36		
	Width-Active	t_{WHA}	960	960	960		
Vsync	Period	t_{VP}	1192	1202	1212	tHP	
	Width	t_{WV}	5	5	5		
	Width-Active	t_{WVA}	1080	1080	1080		
Data Enable	Horizontal back porch	t_{HBP}	156	180	206	tCLK	
	Horizontal front porch	t_{HFP}	24	24	24		
	Vertical back porch	t_{VBP}	104	114	124	tHP	
	Vertical front porch	t_{VFP}	3	3	3		

Note 1. Slow refresh rate, under 60Hz could not be guaranteed about flickering and some noise on screen.

* Tentative Timing Table for 40Hz Refresh Rate (Note 1)

ITEM	Symbol		Min	Typ	Max	Unit	Note
DCLK	Frequency	f_{CLK}	51.4	52.9	54.4	MHz	LVDS 2 port (40Hz)
Hsync	Period	t_{HP}	1124	1140	1160	tCLK	
	Width	t_{WH}	36	36	36		
	Width-Active	t_{WHA}	960	960	960		
Vsync	Period	t_{VP}	1150	1160	1170	tHP	
	Width	t_{WV}	5	5	5		
	Width-Active	t_{WVA}	1080	1080	1080		
Data Enable	Horizontal back porch	t_{HBP}	104	120	140	tCLK	
	Horizontal front porch	t_{HFP}	24	24	24		
	Vertical back porch	t_{VBP}	62	72	82	tHP	
	Vertical front porch	t_{VFP}	3	3	3		

Note 1. Slow refresh rate, under 60Hz could not be guaranteed about flickering and some noise on screen.

3-5. Signal Timing Waveforms

Condition : VCC =3.3V

Data Enable, Hsync, Vsync

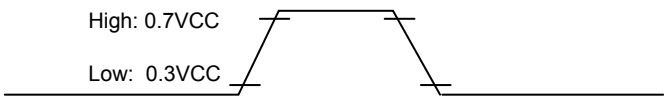

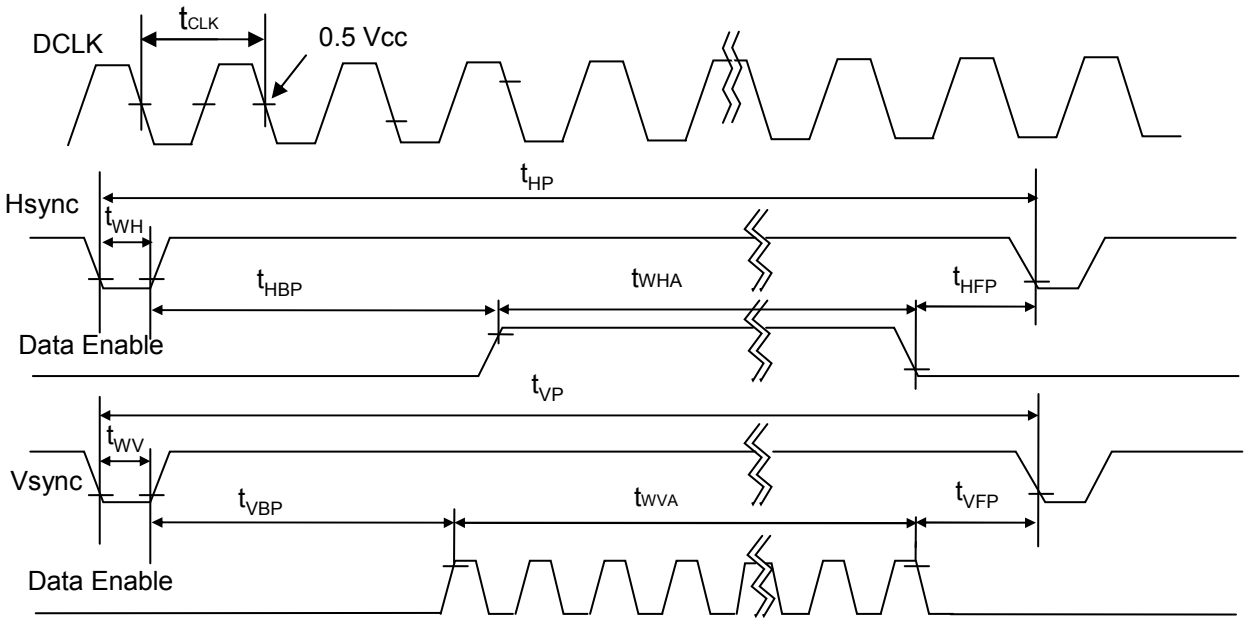

3-6. Color Input Data Reference

The brightness of each primary color (red, green and blue) is based on the 6-bit gray scale data input for the color ; the higher the binary input, the brighter the color. The table below provides a reference for color versus data input.

Table 5. COLOR DATA REFERENCE

Color		Input Color Data																	
		RED						GREEN						BLUE					
		MSB					LSB	MSB					LSB	MSB					LSB
		R 5	R 4	R 3	R 2	R 1	R 0	G 5	G 4	G 3	G 2	G 1	G 0	B 5	B 4	B 3	B 2	B 1	B 0
Basic Color	Black	0	0	0	0	0	0	0	0	0	0	0	0	0	0	0	0	0	0
	Red	1	1	1	1	1	1	0	0	0	0	0	0	0	0	0	0	0	0
	Green	0	0	0	0	0	0	1	1	1	1	1	1	0	0	0	0	0	0
	Blue	0	0	0	0	0	0	0	0	0	0	0	0	1	1	1	1	1	1
	Cyan	0	0	0	0	0	0	1	1	1	1	1	1	1	1	1	1	1	1
	Magenta	1	1	1	1	1	1	0	0	0	0	0	0	1	1	1	1	1	1
	Yellow	1	1	1	1	1	1	1	1	1	1	1	1	0	0	0	0	0	0
	White	1	1	1	1	1	1	1	1	1	1	1	1	1	1	1	1	1	1
RED	RED (00)	0	0	0	0	0	0	0	0	0	0	0	0	0	0	0	0	0	0
	RED (01)	0	0	0	0	0	1	0	0	0	0	0	0	0	0	0	0	0	0
	…	…						…						…					
	RED (62)	1	1	1	1	1	0	0	0	0	0	0	0	0	0	0	0	0	0
	RED (63)	1	1	1	1	1	1	0	0	0	0	0	0	0	0	0	0	0	0
GREEN	GREEN (00)	0	0	0	0	0	0	0	0	0	0	0	0	0	0	0	0	0	0
	GREEN (01)	0	0	0	0	0	0	0	0	0	0	0	1	0	0	0	0	0	0
	...	...						...						...					
	GREEN (62)	0	0	0	0	0	0	1	1	1	1	1	0	0	0	0	0	0	0
	GREEN (63)	0	0	0	0	0	0	1	1	1	1	1	1	0	0	0	0	0	0
BLUE	BLUE (00)	0	0	0	0	0	0	0	0	0	0	0	0	0	0	0	0	0	0
	BLUE (01)	0	0	0	0	0	0	0	0	0	0	0	0	0	0	0	0	0	1
	…	…						…						…					
	BLUE (62)	0	0	0	0	0	0	0	0	0	0	0	0	1	1	1	1	1	0
	BLUE (63)	0	0	0	0	0	0	0	0	0	0	0	0	1	1	1	1	1	1

3-7. Power Sequence

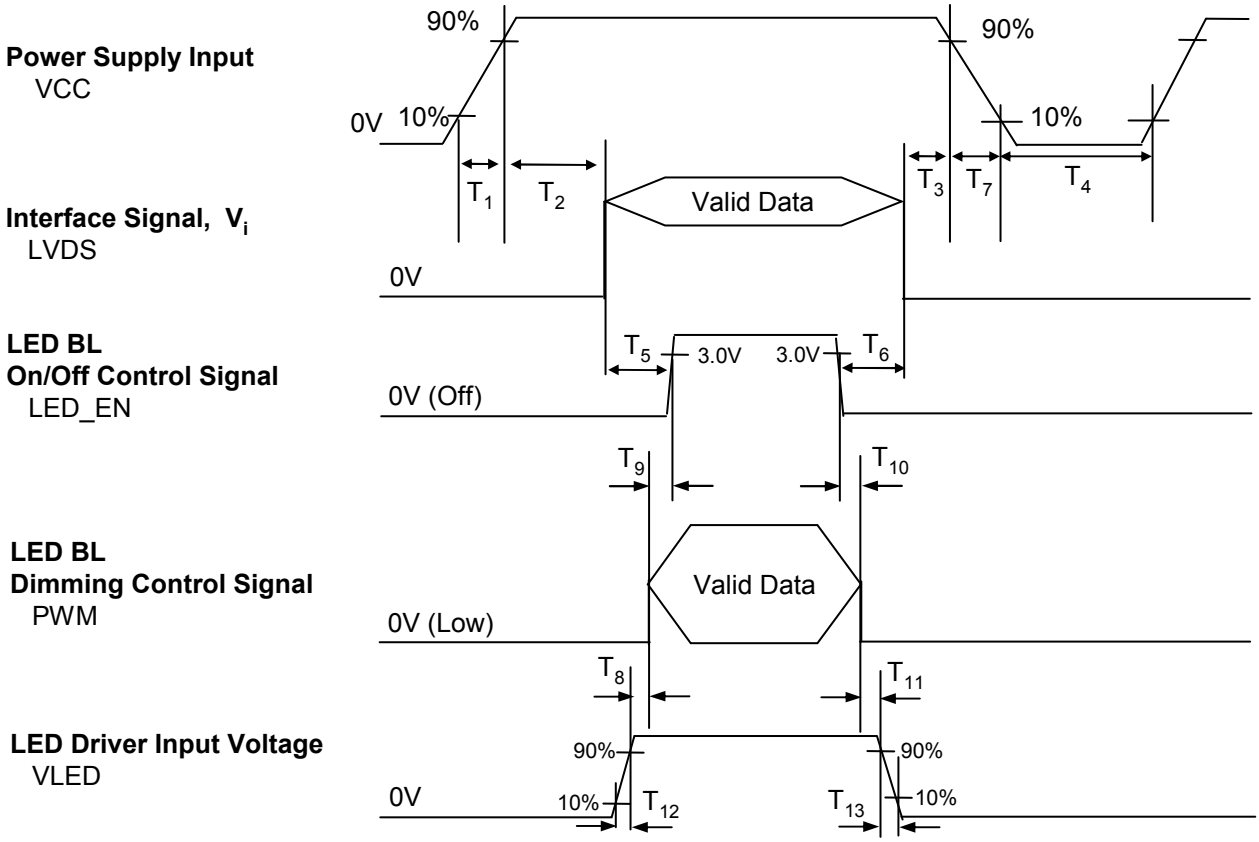

Table 6. POWER SEQUENCE TABLE

Logic Parameter	Value			Units	LED Parameter	Value			Units
	Min.	Typ.	Max.			Min.	Typ.	Max.	
T_1	0.5	-	10	ms	T_8	10	-	-	ms
T_2	0	-	50	ms	T_9	0	-	-	ms
T_3	0	-	50	ms	T_{10}	0	-	-	ms
T_4	400	-	-	ms	T_{11}	10	-	-	ms
T_5	200	-	-	ms	T_{12}	0.5	-	-	ms
T_6	200	-	-	ms	T_{13}	0	-	5000	ms
T_7	3	-	200	ms					

Note)
1. Do not insert the mating cable when system turn on.
2. Valid Data have to meet "3-3. LVDS Signal Timing Specifications"
3. LVDS, LED_EN and PWM need to be on pull-down condition on invalid status.
4. LGD recommend the rising sequence of VLED after the Vcc and valid status of LVDS turn on.

4. Optical Specification

Optical characteristics are determined after the unit has been 'ON' and stable for approximately 30 minutes in a dark environment at 25°C. The values specified are at an approximate distance 50cm from the LCD surface at a viewing angle of Φ and Θ equal to 0°.
FIG. 1 presents additional information concerning the measurement equipment and method.

FIG. 1 Optical Characteristic Measurement Equipment and Method

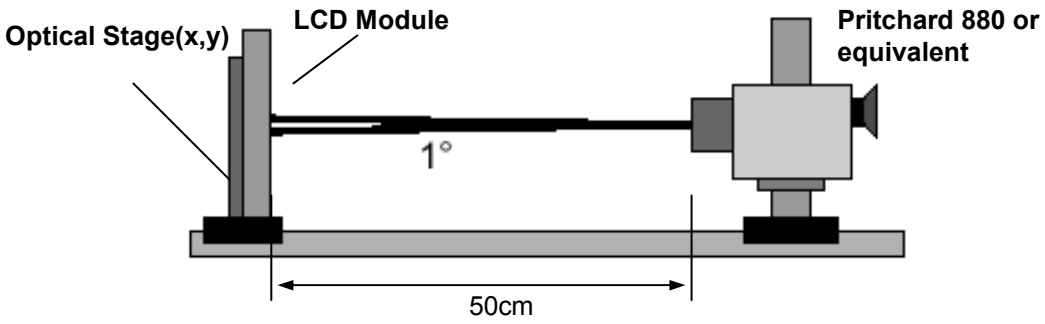

Table 9. OPTICAL CHARACTERISTICS

Ta=25°C, VCC=3.3V, fv=60Hz, f_{CLK}= 72.1MHz

Parameter		Symbol	Values			Units	Notes
			Min	Typ	Max		
Contrast Ratio		CR	400	-	-		1
Surface Luminance, white		L_{WH}	210	250	-	cd/m^2	2
Luminance Variation		δ_{WHITE}	-	1.4	1.6		3
Response Time		Tr_R+ Tr_D	-	35	50	ms	4
Color Coordinates							
	RED	RX	0.589	0.619	0.649		
		RY	0.340	0.370	0.400		
	GREEN	GX	0.315	0.345	0.375		
		GY	0.577	0.607	0.637		
	BLUE	BX	0.118	0.148	0.178		
		BY	0.085	0.115	0.145		
	WHITE	WX	0.283	0.313	0.343		
		WY	0.299	0.329	0.359		
Viewing Angle							5
	x axis, right(Φ=0°)	Θr	80	-	-	degree	
	x axis, left (Φ=180°)	Θl	80	-	-	degree	
	y axis, up (Φ=90°)	Θu	80	-	-	degree	
	y axis, down (Φ=270°)	Θd	80	-	-	degree	
Gray Scale							6

Note)

1. Contrast Ratio(CR) is defined mathematically as

$$\text{Contrast Ratio} = \frac{\text{Surface Luminance with all white pixels}}{\text{Surface Luminance with all black pixels}}$$

2. Surface luminance is the average of 5 point across the LCD surface 50cm from the surface with all pixels displaying white. For more information see FIG 1.

LWH = Average(L1,L2, … L5)

3. The variation in surface luminance , The panel total variation (δ WHITE) is determined by measuring LN at each test position 1 through 13 and then defined as following numerical formula. For more information see FIG 2.

$$\delta\,\text{WHITE}(= \frac{\text{Maximum(L1,L2, … L13)} - \text{Minimum(L1,L2, … L13)}}{\text{Maximum(L1,L2, … L13)}} * 100(\%)$$

4. Response time is the time required for the display to transition from white to black (rise time, TrR) and from black to white(Decay Time, TrD). For additional information see FIG 3.

5. Viewing angle is the angle at which the contrast ratio is greater than 10. The angles are determined for the horizontal or x axis and the vertical or y axis with respect to the z axis which is normal to the LCD surface. For more information see FIG 4.

6. Gray scale specification * fV = 60Hz

Gray Level	Luminance [%] (Typ)
L0	0.13
L7	0.93
L15	4.53
L23	10.8
L31	20.3
L39	33.0
L47	49.0
L55	73.0
L63	100.0

FIG. 2 Luminance

<Measuring point for Average Luminance & measuring point for Luminance variation>

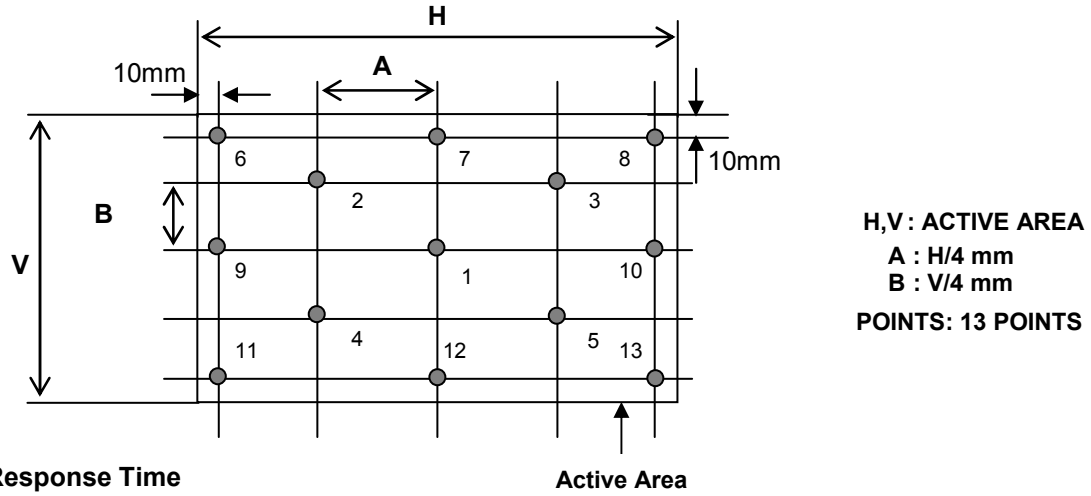

FIG. 3 Response Time

The response time is defined as the following figure and shall be measured by switching the input signal for “black” and “white”.

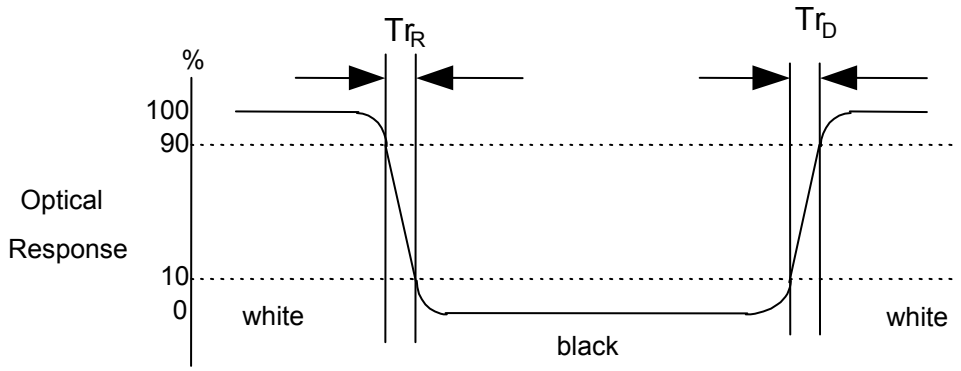

FIG. 4 Viewing angle

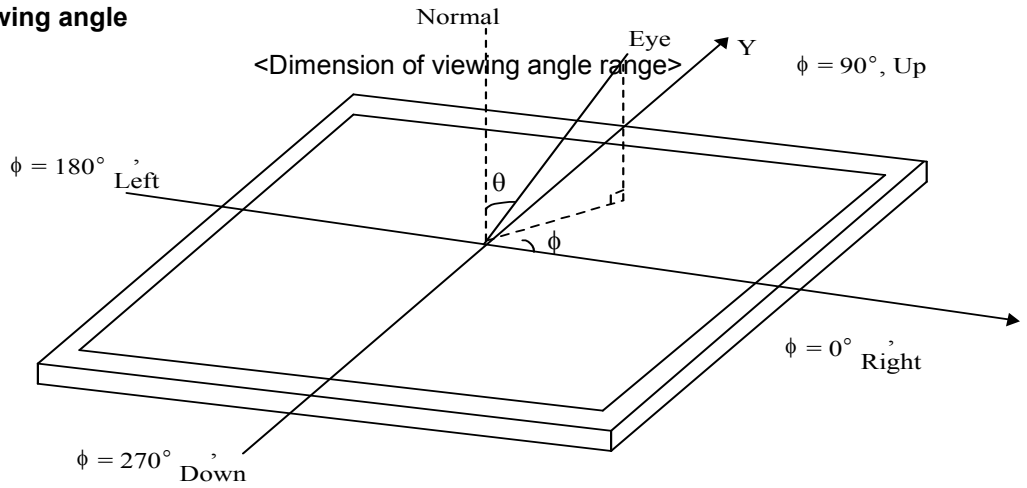

5. Mechanical Characteristics

The contents provide general mechanical characteristics for the model LP156WF4. In addition the figures in the next page are detailed mechanical drawing of the LCD.

Outline Dimension	Horizontal	359.5 ± 0.5mm
	Vertical	207.7 ± 0.5mm
	Thickness	3.4mm (max)
Bezel Area	Horizontal	347.55 ± 0.5mm
	Vertical	196.9 ± 0.5mm
Active Display Area	Horizontal	344.16 ± 0.3 mm
	Vertical	193.59 ± 0.3 mm
Weight	330g (Max.) / 320g (Typ.)	
Surface Treatment	Hard coating(3H), Anti-Glare treatment of the front polarizer	

<FRONT VIEW>

Note) Unit:[mm], General tolerance: ± 0.5mm

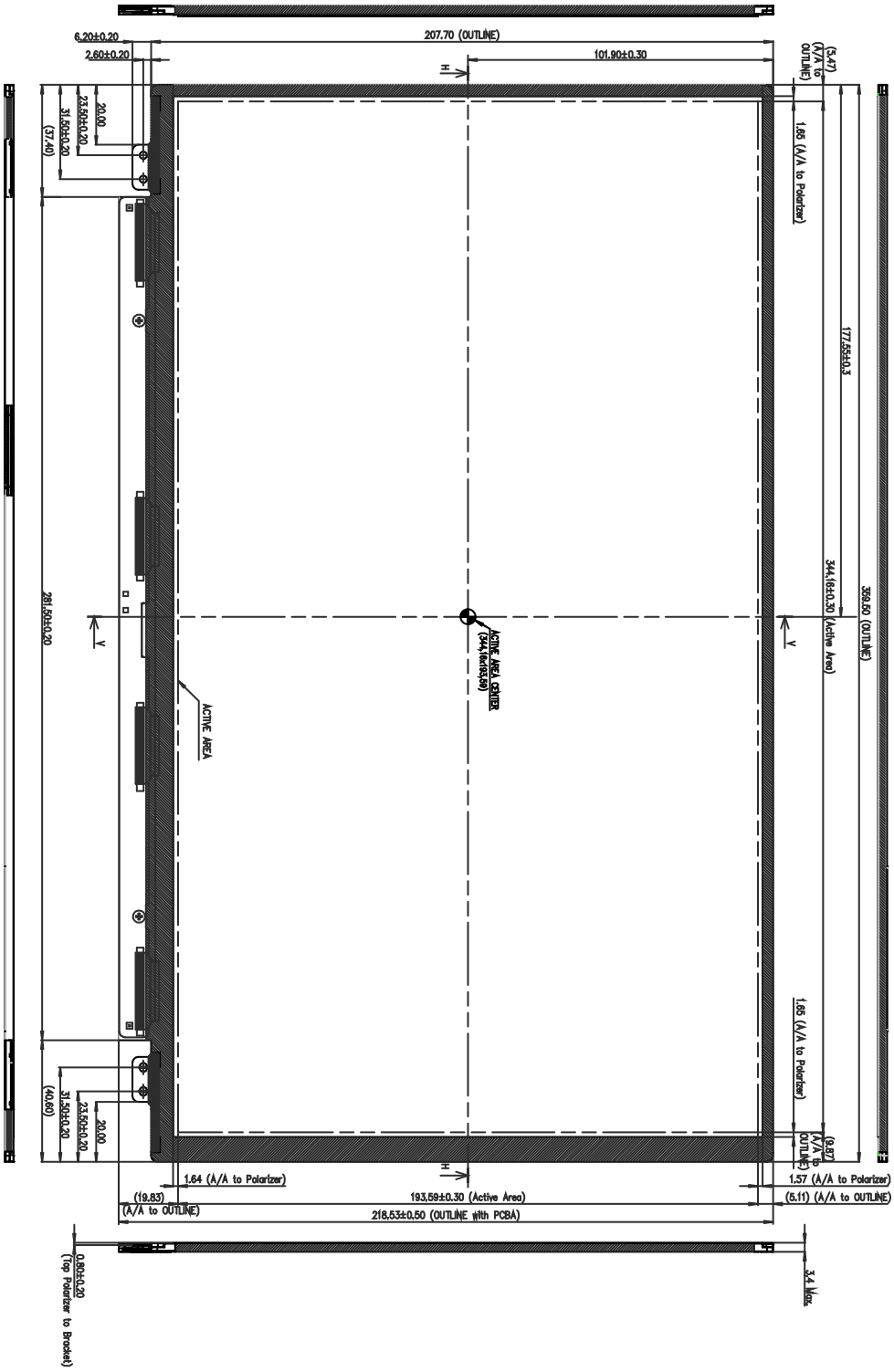

<REAR VIEW>

Note) Unit:[mm], General tolerance: ± 0.5mm

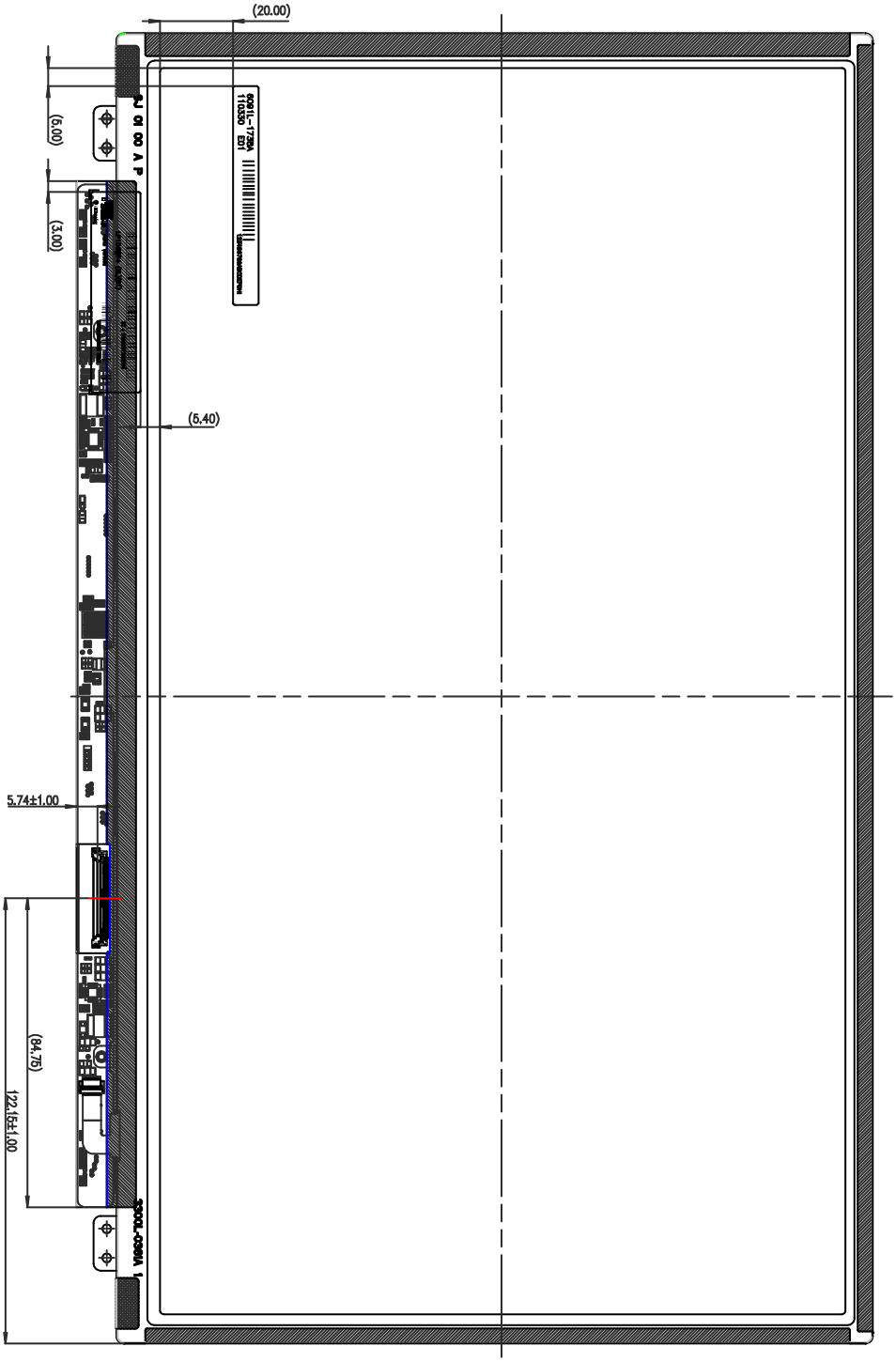

6. Reliability

Environment test condition

No.	Test Item	Conditions
1	High temperature storage test	Ta= 60°C, 240h
2	Low temperature storage test	Ta= -20°C, 240h
3	High temperature operation test	Ta= 50°C, 50%RH, 240h
4	Low temperature operation test	Ta= 0°C, 240h
5	Vibration test (non-operating)	Sine wave, 5 ~ 150Hz, 1.5G, 0.37oct/min 3 axis, 30min/axis
6	Shock test (non-operating)	- No functional or cosmetic defects following a shock to all 6 sides delivering at least 180 G in a half sine pulse no longer than 2 ms to the display module - No functional defects following a shock delivering at least 200 g in a half sine pulse no longer than 2 ms to each of 6 sides. Each of the 6 sides will be shock tested with one each display, for a total of 6 displays
7	Altitude operating storage / shipment	0 ~ 10,000 feet (3,048m) 24Hr 0 ~ 40,000 feet (12,192m) 24Hr

{ Result Evaluation Criteria }
There should be no change which might affect the practical display function when the display quality test is conducted under normal operating condition.

7. International Standards

7-1. Safety

a) UL 60950-1, Second Edition, Underwriters Laboratories Inc.
Information Technology Equipment - Safety - Part 1 : General Requirements.

b) CAN/CSA C22.2 No.60950-1-07, Second Edition, Canadian Standards Association.
Information Technology Equipment - Safety - Part 1 : General Requirements.

c) EN 60950-1:2006 + A11:2009, European Committee for Electrotechnical Standardization (CENELEC).
Information Technology Equipment - Safety - Part 1 : General Requirements.

d) IEC 60950-1:2005, Second Edition, The International Electrotechnical Commission (IEC).
Information Technology Equipment - Safety - Part 1 : General Requirements.

7-2. EMC

a) ANSI C63.4 “American National Standard for Methods of Measurement of Radio-Noise Emissions from Low-Voltage Electrical and Electronic Equipment in the Range of 9 kHz to 40 GHz.” American National Standards Institute (ANSI), 2003.

b) CISPR 22 “Information technology equipment – Radio disturbance characteristics – Limit and methods of measurement." International Special Committee on Radio Interference (CISPR), 2005.

c) CISPR 13 “Sound and television broadcast receivers and associated equipment – Radio disturbance characteristics – Limits and method of measurement." International Special Committee on Radio Interference (CISPR), 2006.

7-3. Environment

a) RoHS, Directive 2002/95/EC of the European Parliament and of the council of 27 January 2003

8. Packing

8-1. Designation of Lot Mark

a) Lot Mark

A	B	C	D	E	F	G	H	I	J	K	L	M

A,B,C : SIZE(INCH)
E : MONTH
D : YEAR
F ~ M : SERIAL NO.

Note

1. YEAR

Year	2011	2012	2013	2014	2015	2016	2017	2018	2019	2020
Mark	A	B	C	D	E	F	G	H	J	K

2. MONTH

Month	Jan	Feb	Mar	Apr	May	Jun	Jul	Aug	Sep	Oct	Nov	Dec
Mark	1	2	3	4	5	6	7	8	9	A	B	C

b) Location of Lot Mark

Serial No. is printed on the label. The label is attached to the backside of the LCD module.
This is subject to change without prior notice.

8-2. Packing Form

a) Package quantity in one box : 20 pcs

b) Box Size : 486 x 380 x 310

9. PRECAUTIONS

Please pay attention to the followings when you use this TFT LCD module.

9-1. MOUNTING PRECAUTIONS

(1) You must mount a module using holes arranged in four corners or four sides.
(2) You should consider the mounting structure so that uneven force (ex. Twisted stress) is not applied to the module. And the case on which a module is mounted should have sufficient strength so that external force is not transmitted directly to the module.
(3) Please attach the surface transparent protective plate to the surface in order to protect the polarizer. Transparent protective plate should have sufficient strength in order to the resist external force.
(4) You should adopt radiation structure to satisfy the temperature specification.
(5) Acetic acid type and chlorine type materials for the cover case are not desirable because the former generates corrosive gas of attacking the polarizer at high temperature and the latter causes circuit break by electro-chemical reaction.
(6) Do not touch, push or rub the exposed polarizers with glass, tweezers or anything harder than HB pencil lead. And please do not rub with dust clothes with chemical treatment.
Do not touch the surface of polarizer for bare hand or greasy cloth.(Some cosmetics are detrimental to the polarizer.)
(7) When the surface becomes dusty, please wipe gently with absorbent cotton or other soft materials like chamois soaks with petroleum benzene. Normal-hexane is recommended for cleaning the adhesives used to attach front / rear polarizers. Do not use acetone, toluene and alcohol because they cause chemical damage to the polarizer.
(8) Wipe off saliva or water drops as soon as possible. Their long time contact with polarizer causes deformations and color fading.
(9) Do not open the case because inside circuits do not have sufficient strength.
(10) When handling the LCD module, it needs to handle with care not to give mechanical stress to the PCB and Mounting Hole area.”

9-2. OPERATING PRECAUTIONS

(1) The spike noise causes the mis-operation of circuits. It should be lower than following voltage :
V=± 200mV(Over and under shoot voltage)

(2) Response time depends on the temperature.(In lower temperature, it becomes longer.)
(3) Brightness depends on the temperature. (In lower temperature, it becomes lower.)
And in lower temperature, response time(required time that brightness is stable after turned on) becomes longer.
(4) Be careful for condensation at sudden temperature change. Condensation makes damage to polarizer or electrical contacted parts. And after fading condensation, smear or spot will occur.
(5) When fixed patterns are displayed for a long time, remnant image is likely to occur.
(6) Module has high frequency circuits. Sufficient suppression to the electromagnetic interference shall be done by system manufacturers. Grounding and shielding methods may be important to minimized the interference.

9-3. ELECTROSTATIC DISCHARGE CONTROL

Since a module is composed of electronic circuits, it is not strong to electrostatic discharge. Make certain that treatment persons are connected to ground through wrist band etc. And don't touch interface pin directly.

9-4. PRECAUTIONS FOR STRONG LIGHT EXPOSURE

Strong light exposure causes degradation of polarizer and color filter.

9-5. STORAGE

When storing modules as spares for a long time, the following precautions are necessary.

(1) Store them in a dark place. Do not expose the module to sunlight or fluorescent light. Keep the temperature between 5°C and 35°C at normal humidity.
(2) The polarizer surface should not come in contact with any other object.
It is recommended that they be stored in the container in which they were shipped.

9-6. HANDLING PRECAUTIONS FOR PROTECTION FILM

(1) When the protection film is peeled off, static electricity is generated between the film and polarizer. This should be peeled off slowly and carefully by people who are electrically grounded and with well ion-blown equipment or in such a condition, etc.
(2) The protection film is attached to the polarizer with a small amount of glue. If some stress is applied to rub the protection film against the polarizer during the time you peel off the film, the glue is apt to remain on the polarizer.
Please carefully peel off the protection film without rubbing it against the polarizer.
(3) When the module with protection film attached is stored for a long time, sometimes there remains a very small amount of glue still on the polarizer after the protection film is peeled off.
(4) You can remove the glue easily. When the glue remains on the polarizer surface or its vestige is recognized, please wipe them off with absorbent cotton waste or other soft material like chamois soaked with normal-hexane.

APPENDIX A. Enhanced Extended Display Identification Data (EEDID™) 1/3

	Byte (Dec)	Byte (Hex)	Field Name and Comments	Value (Hex)	Value (Bin)
Header	0	00	Header	00	00000000
	1	01	Header	FF	11111111
	2	02	Header	FF	11111111
	3	03	Header	FF	11111111
	4	04	Header	FF	11111111
	5	05	Header	FF	11111111
	6	06	Header	FF	11111111
	7	07	Header	00	00000000
Vendor / Product EDID Version	8	08	EISA manufacture code (3 Character ID) LGD	30	00110000
	9	09	EISA manufacture code (Compressed ASCⅡ)	E4	11100100
	10	0A	Panel Supplier Reserved - Product Code 0323h	23	00100011
	11	0B	(Hex. LSB first)	03	00000011
	12	0C	LCD Module Serial No - Preferred but Optional ("0" If not used)	00	00000000
	13	0D	LCD Module Serial No - Preferred but Optional ("0" If not used)	00	00000000
	14	0E	LCD Module Serial No - Preferred but Optional ("0" If not used)	00	00000000
	15	0F	LCD Module Serial No - Preferred but Optional ("0" If not used)	00	00000000
	16	10	Week of Manufacture 00 weeks	00	00000000
	17	11	Year of Manufacture 2011 years	15	00010101
	18	12	EDID structure version # = 1	01	00000001
	19	13	EDID revision # = 3	03	00000011
Display Parameters	20	14	Video input Definition = Digital signal	80	10000000
	21	15	Max H image size (Rounded cm) = 35 cm	23	00100011
	22	16	Max V image size (Rounded cm) = 19 cm	13	00010011
	23	17	Display gamma = (gamma*100)-100 = Example:(2.2*100)-100=120 = 2.2 Gamma	78	01111000
	24	18	Feature Support (no_DPMS, no_Active Off/Very Low Power, RGB color display, Timing BLK 1,no GTF)	0A	00001010
Panel Color Coordinates	25	19	Red/Green Low Bits (RxRy/GxGy)	B6	10110110
	26	1A	Blue/White Low Bits (BxBy/WxWy)	25	00100101
	27	1B	Red X Rx = 0.619	9E	10011110
	28	1C	Red Y Ry = 0.370	5E	01011110
	29	1D	Green X Gx = 0.345	58	01011000
	30	1E	Green Y Gy = 0.607	9B	10011011
	31	1F	Blue X Bx = 0.148	26	00100110
	32	20	Blue Y By = 0.115	1D	00011101
	33	21	White X Wx = 0.313	50	01010000
	34	22	White Y Wy = 0.329	54	01010100
Established Timings	35	23	Established timing 1 (00h if not used)	00	00000000
	36	24	Established timing 2 (00h if not used)	00	00000000
	37	25	Manufacturer's timings (00h if not used)	00	00000000
Standard Timing ID	38	26	Standard timing ID1 (01h if not used)	01	00000001
	39	27	Standard timing ID1 (01h if not used)	01	00000001
	40	28	Standard timing ID2 (01h if not used)	01	00000001
	41	29	Standard timing ID2 (01h if not used)	01	00000001
	42	2A	Standard timing ID3 (01h if not used)	01	00000001
	43	2B	Standard timing ID3 (01h if not used)	01	00000001
	44	2C	Standard timing ID4 (01h if not used)	01	00000001
	45	2D	Standard timing ID4 (01h if not used)	01	00000001
	46	2E	Standard timing ID5 (01h if not used)	01	00000001
	47	2F	Standard timing ID5 (01h if not used)	01	00000001
	48	30	Standard timing ID6 (01h if not used)	01	00000001
	49	31	Standard timing ID6 (01h if not used)	01	00000001
	50	32	Standard timing ID7 (01h if not used)	01	00000001
	51	33	Standard timing ID7 (01h if not used)	01	00000001
	52	34	Standard timing ID8 (01h if not used)	01	00000001
	53	35	Standard timing ID8 (01h if not used)	01	00000001

APPENDIX A. Enhanced Extended Display Identification Data (EEDID™) 2/3

	Byte (Dec)	Byte (Hex)	Field Name and Comments	Value (Hex)	Value (Bin)
Timing Descriptor #1	54	36	Pixel Clock/10,000 (LSB) 144.2 MHz @ 59.9H	54	01010100
	55	37	Pixel Clock/10,000 (MSB)	38	00111000
	56	38	Horizontal Active (lower 8 bits) 1920 Pixels	80	10000000
	57	39	Horizontal Blanking(Thp-HA) (lower 8 bits) 228 Pixels	E4	11100100
	58	3A	Horizontal Active / Horizontal Blanking(Thp-HA) (upper 4:4bits)	70	01110000
	59	3B	Vertical Avtive 1080 Lines	38	00111000
	60	3C	Vertical Blanking (Tvp-HA) (DE Blanking typ.for DE only panels) 40 Lines	28	00101000
	61	3D	Vertical Active : Vertical Blanking (Tvp-HA) (upper 4:4bits)	40	01000000
	62	3E	Horizontal Sync. Offset (Thfp) 48 Pixels	30	00110000
	63	3F	Horizontal Sync Pulse Width (HSPW) 72 Pixels	48	01001000
	64	40	Vertical Sync Offset(Tvfp) : Sync Width (VSPW) 3 Lines : 5 Lines	35	00110101
	65	41	Horizontal Vertical Sync Offset/Width (upper 2bits)	00	00000000
	66	42	Horizontal Image Size (mm) 345 mm	59	01011001
	67	43	Vertical Image Size (mm) 194 mm	C2	11000010
	68	44	Horizontal Image Size / Vertical Image Size	10	00010000
	69	45	Horizontal Border = 0 (Zero for Notebook LCD)	00	00000000
	70	46	Vertical Border = 0 (Zero for Notebook LCD)	00	00000000
	71	47	Non-Interlace, Normal display, no stereo, Digital Separate (Vsync_NEG, Hsync_NEG), DE only note : LSB is set to 'l' if panel is DE-timing only. H/V can be ignored.	19	00011001
Timing Descriptor #2	72	48	Flag	00	00000000
	73	49	Flag	00	00000000
	74	4A	Flag	00	00000000
	75	4B	Data Type Tag (Descriptor Defined by manufacturer)	00	00000000
	76	4C	Flag	00	00000000
	77	4D	Descriptor Defined by manufacturer	00	00000000
	78	4E	Descriptor Defined by manufacturer	00	00000000
	79	4F	Descriptor Defined by manufacturer	00	00000000
	80	50	Descriptor Defined by manufacturer	00	00000000
	81	51	Descriptor Defined by manufacturer	00	00000000
	82	52	Descriptor Defined by manufacturer	00	00000000
	83	53	Descriptor Defined by manufacturer	00	00000000
	84	54	Descriptor Defined by manufacturer	00	00000000
	85	55	Descriptor Defined by manufacturer	00	00000000
	86	56	Descriptor Defined by manufacturer	00	00000000
	87	57	Descriptor Defined by manufacturer	00	00000000
	88	58	Descriptor Defined by manufacturer	00	00000000
	89	59	Descriptor Defined by manufacturer	00	00000000
Timing Descriptor #3	90	5A	Flag	00	00000000
	91	5B	Flag	00	00000000
	92	5C	Flag	00	00000000
	93	5D	Data Type Tag (ASCII String)	FE	11111110
	94	5E	Flag	00	00000000
	95	5F	ASCII String L	4C	01001100
	96	60	ASCII String G	47	01000111
	97	61	ASCII String	20	00100000
	98	62	ASCII String D	44	01000100
	99	63	ASCII String i	69	01101001
	100	64	ASCII String s	73	01110011
	101	65	ASCII String p	70	01110000
	102	66	ASCII String l	6C	01101100
	103	67	ASCII String a	61	01100001
	104	68	ASCII String y	79	01111001
	105	69	Manufacturer P/N(If<13 char--> 0Ah, then terminate with ASCⅡ code 0Ah,set remaining char = 2	0A	00001010
	106	6A	Manufacturer P/N(If<13 char--> 0Ah, then terminate with ASCⅡ code 0Ah,set remaining char = 2	20	00100000
	107	6B	Manufacturer P/N(If<13 char--> 0Ah, then terminate with ASCⅡ code 0Ah,set remaining char = 2	20	00100000

APPENDIX A. Enhanced Extended Display Identification Data (EEDID™) 3/3

	Byte (Dec)	Byte (Hex)	Field Name and Comments		Value (Hex)	Value (Bin)
Timing Descriptor #4	108	6C	Flag		00	00000000
	109	6D	Flag		00	00000000
	110	6E	Flag		00	00000000
	111	6F	Data Type Tag (ASCII String)		FE	11111110
	112	70	Flag		00	00000000
	113	71	ASCII String	L	4C	01001100
	114	72	ASCII String	P	50	01010000
	115	73	ASCII String	1	31	00110001
	116	74	ASCII String	5	35	00110101
	117	75	ASCII String	6	36	00110110
	118	76	ASCII String	W	57	01010111
	119	77	ASCII String	F	46	01000110
	120	78	ASCII String	4	34	00110100
	121	79	ASCII String	-	2D	00101101
	122	7A	ASCII String	S	53	01010011
	123	7B	ASCII String	L	4C	01001100
	124	7C	ASCII String	B	42	01000010
	125	7D	ASCII String	1	31	00110001
Checksum	126	7E	Extension flag (# of optional 128 panel ID extension block to follow, Typ = 0)		00	00000000
	127	7F	Check Sum (The 1-byte sum of all 128 bytes in this panel ID block shall = 0)		B2	10110010