SPECIFICATION
FOR
APPROVAL

(◆) **Preliminary Specification**

(**Final Specification**

Title	13.3” WXGA TFT LCD

Customer	APPLE
MODEL	K6

SUPPLIER	LG. Display Co., Ltd.
*MODEL	LP133WX3
Suffix	TLA3

*When you obtain standard approval,
please use the above model name without suffix

APPROVED BY	SIGNATURE
/	
/	
/	

Please return 1 copy for your confirmation with your signature and comments.

APPROVED BY	SIGNATURE
J.K.Kim/ S.Manager	
REVIEWED BY	
K.T.Moon/ Manager	
PREPARED BY	
H.H. Lee/ Engineer	

Product Engineering Dept.
LG. Display Co., Ltd

Contents

No	ITEM	Page
	COVER	1
	CONTENTS	2
	RECORD OF REVISIONS	3
1	GENERAL DESCRIPTION	4
2	ABSOLUTE MAXIMUM RATINGS	5
3	ELECTRICAL SPECIFICATIONS	
3-1	ELECTRICAL CHARACTREISTICS	6
3-2	INTERFACE CONNECTIONS	7
3-3	LVDS SIGNAL TIMING SPECIFICATIONS	8
3-4	SIGNAL TIMING WAVEFORMS	11
3-5	COLOR INPUT DATA REFERNECE	12
3-6	POWER SEQUENCE	13
4	OPTICAL SFECIFICATIONS	14
5	MECHANICAL CHARACTERISTICS	18
6	RELIABLITY	21
7	INTERNATIONAL STANDARDS	
7-1	SAFETY	22
7-2	EMC	22
8	PACKING	
8-1	DESIGNATION OF LOT MARK	23
8-2	PACKING FORM	23
9	PRECAUTIONS	24
A	APPENDIX. Enhanced Extended Display Identification Data	26

RECORD OF REVISIONS

Revision No	Revision Date	Page	Description	EDID ver
0.0	23. Oct. 2009	-	First Draft	0.0

1. General Description

The LP133WX3 is a Color Active Matrix Liquid Crystal Display with an integral LED backlight system. The matrix employs a-Si Thin Film Transistor as the active element. It is a transmissive type display operating in the normally white mode. This TFT-LCD has 13.3 inches diagonally measured active display area with WXGA resolution(1280 horizontal by 800 vertical pixel array). Each pixel is divided into Red, Green and Blue sub-pixels or dots which are arranged in vertical stripes. Gray scale or the brightness of the sub-pixel color is determined with a 6-bit gray scale signal for each dot, thus, presenting a palette of more than 262,144 colors.

The LP133WX3 has been designed to apply the interface method that enables low power, high speed, low EMI.

The LP133WX3 is intended to support applications where thin thickness, low power are critical factors and graphic displays are important. In combination with the vertical arrangement of the sub-pixels, the LP133WX3 characteristics provide an excellent flat display for office automation products such as Notebook PC.

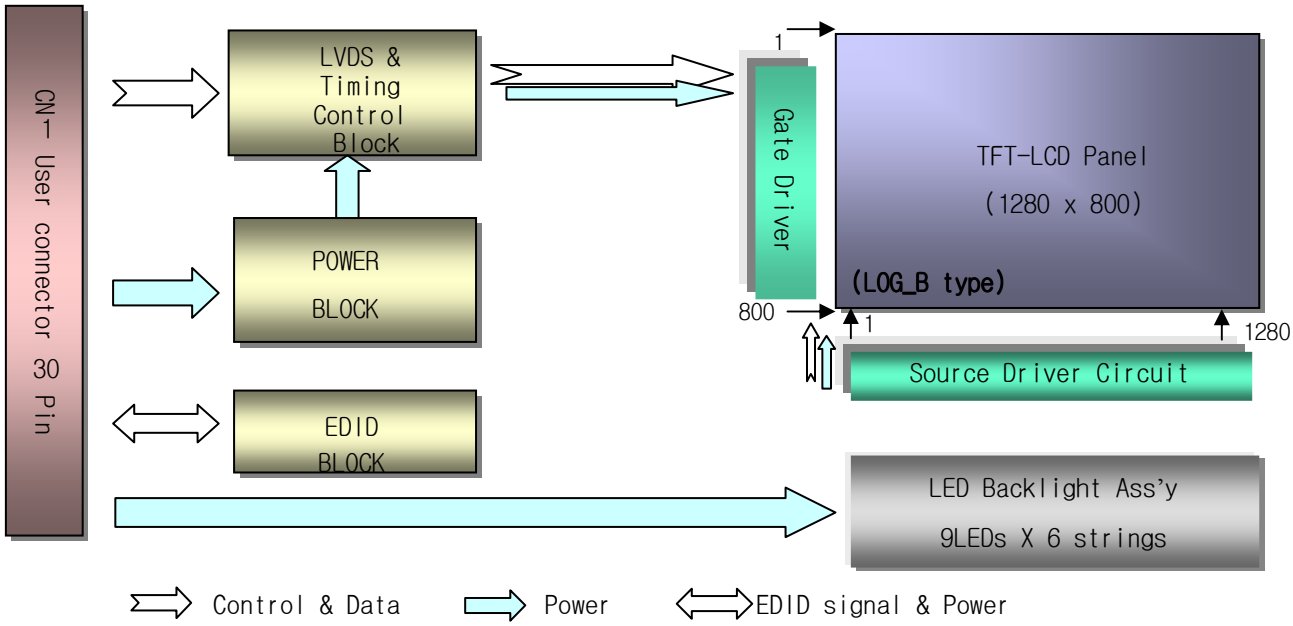

General Features

Active Screen Size	13.3 inches diagonal
Outline Dimension	297.15 (H) × 192.15 (V) × 3.75(D, Max.) mm
Pixel Pitch	0.2235 mm × 0.2235 mm
Pixel Format	1280 horiz. by 800 vert. Pixels RGB strip arrangement
Color Depth	6-bit, 262,144 colors
Luminance, White	275cd/m^2(Typ., @I_{LED}=23mA)
Power Consumption	Logic : 0.76W(typ.@Mosaic), Back Light : 3.29W(typ.@ I_{LED}= 21mA)
Weight	310(Max.)
Display Operating Mode	Transmissive mode, normally white
Surface Treatment	Hard Coating(Glare), Anti reflection treatment of the front Polarizer (Haze 0%)

2. Absolute Maximum Ratings

The following are maximum values which, if exceeded, may cause faulty operation or damage to the unit.

Table 1. ABSOLUTE MAXIMUM RATINGS

Parameter	Symbol	Values		Units	Notes
		Min	Max		
Power Input Voltage	VCC	-0.3	4.0	Vdc	at 25 ± 5°C
Operating Temperature	TOP	0	50	°C	1
Storage Temperature	HST	-20	60	°C	1
Operating Ambient Humidity	HOP	10	90	%RH	1
Storage Humidity	HST	10	90	%RH	1

Note : 1. Temperature and relative humidity range are shown in the figure below.
Wet bulb temperature should be 39°C Max, and no condensation of water.

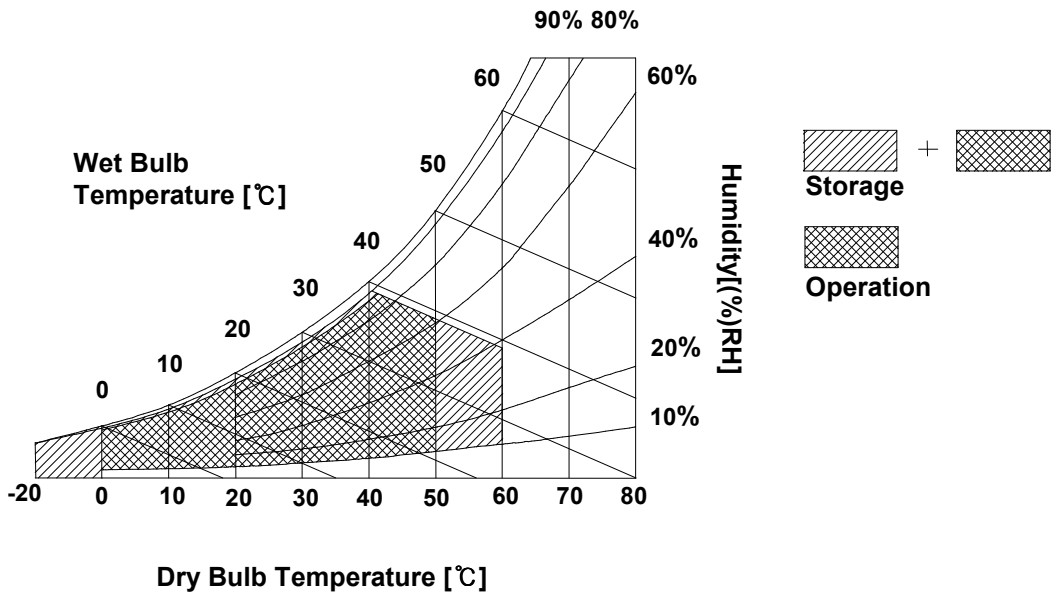

3. Electrical Specifications

3-1. Electrical Characteristics

The LP133WX3 requires two power inputs. One is employed to power the LCD electronics and to drive the TFT array and liquid crystal. The second input which powers the LED BL.

Table 2. ELECTRICAL CHARACTERISTICS

Parameter	Symbol	Values			Unit	Notes
		Min	Typ	Max		
MODULE :						
Power Supply Input Voltage	VCC	3.0	3.3	3.6	V_{DC}	
Power Supply Input Current	I_{CC} Mosaic	-	230	265	mA	1
Power Consumption	Pc	-	0.76	0.875	Watt	1
Differential Impedance	Zm	90	100	110	Ohm	2
LED Backlight :						
Operating Current per string	I_{LED}	5	23	24	mA	3
Power Consumption	P_{BL}	-	3.2	3.5	Watt	4
Life Time		10,000	-	-	Hrs	5

Note)

1. The specified current and power consumption are under the Vcc = 3.3V , 25℃, fv = 60Hz condition whereas Mosaic pattern is displayed and fv is the frame frequency.

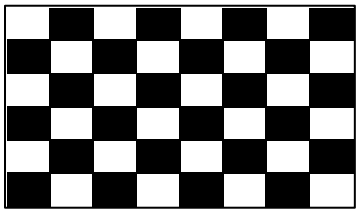

2. This impedance value is needed to proper display and measured form LVDS Tx to the mating connector.
3. The typical operating current is for the typical surface luminance (L_{WH}) in optical characteristics.
4. Define the brightness of the lamp after being lighted for 5 minutes as 100%, Ts is the time required for the brightness of the center of the lamp to be not less than 95%.
5. The life time is determined as the time at which brightness of LED is 50% compare to that of initial value at the typical LED current.

3-2. Interface Connections

This LCD employs two interface connections, a 30 pin connector is used for the module electronics interface and the other connector is used for the integral backlight system.
The electronics interface connector is a model 20474-030E-1# manufactured by I-PEX.

Table 3. MODULE CONNECTOR PIN CONFIGURATION (CN1)

Pin	Symbol	Description	Notes
1	GND	Ground	[LVDS Receiver] SiliconWorks, SW0618V [Connector] I-PEX 20474-030E–1# [Mating Connector] I-PEX 20472-030T-10 series or equivalent (micro-coax type) [Connector pin arrangement] LCD front view 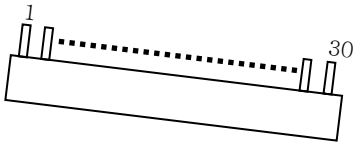
2	VCC	Power Supply, 3.3V Typ.	
3	VCC	Power Supply, 3.3V Typ.	
4	V EEDID	DDC 3.3V power	
5	GSP	GSP	
6	Clk EEDID	DDC Clock	
7	DATA EEDID	DDC Data	
8	R_{IN} 0−	Negative LVDS differential data input	
9	R_{IN} 0+	Positive LVDS differential data input	
10	GND	Ground	
11	R_{IN} 1−	Negative LVDS differential data input	
12	R_{IN} 1+	Positive LVDS differential data input	
13	GND	Ground	
14	R_{IN} 2−	Negative LVDS differential data input	
15	R_{IN} 2+	Positive LVDS differential data input	
16	GND	Ground	
17	CLKIN−	Negative LVDS differential clock input	
18	CLKIN+	Positive LVDS differential clock input	
19	GND	Ground	
20	NC	No Connection	
21	Vdc	LED Anode (Positive)	
22	Vdc	LED Anode (Positive)	
23	NC	No Connection	
24	Vdc1	LED Cathode (Negative)	
25	Vdc2	LED Cathode (Negative)	
26	Vdc3	LED Cathode (Negative)	
27	Vdc4	LED Cathode (Negative)	
28	Vdc5	LED Cathode (Negative)	
29	Vdc6	LED Cathode (Negative)	
30	NC	No Connection	

3-3. LVDS Signal Timing Specifications

3-3-1. DC Specification

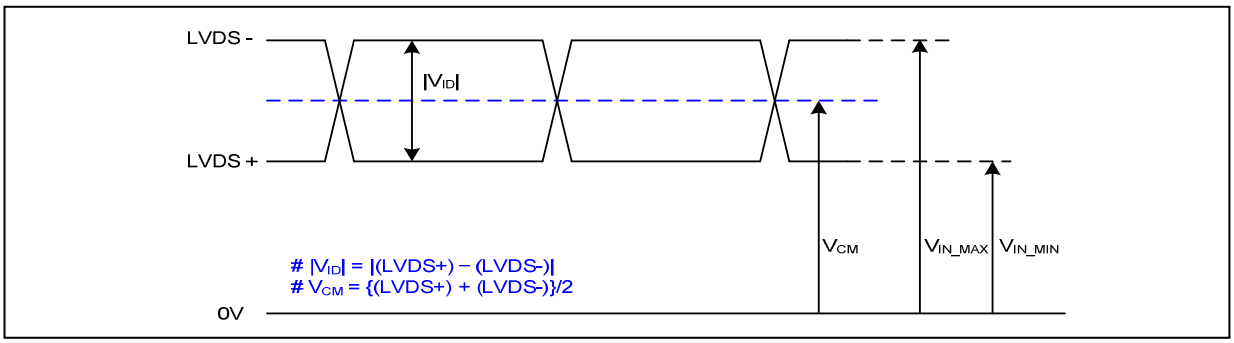

Description	Symbol	Min	Max	Unit	Notes
LVDS Differential Voltage	$\|V_{ID}\|$	100	600	mV	-
LVDS Common mode Voltage	V_{CM}	0.6	1.8	V	-
LVDS Input Voltage Range	V_{IN}	0.3	2.1	V	-

3-3-2. AC Specification

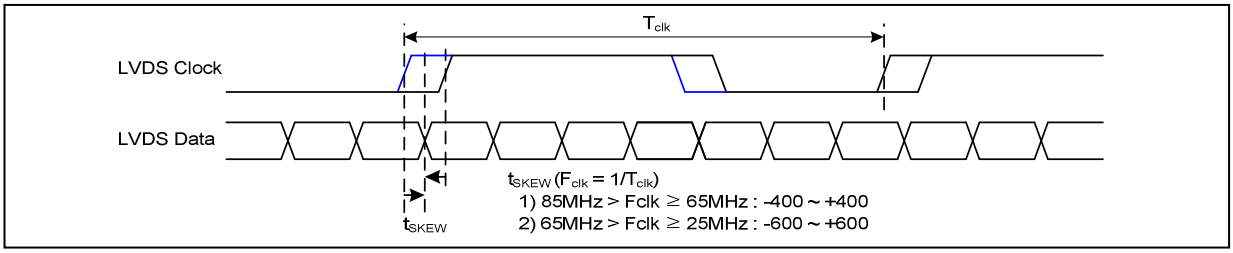

Description	Symbol	Min	Max	Unit	Notes
LVDS Clock to Data Skew Margin	t_{SKEW}	- 400	+ 400	ps	85MHz > Fclk ≥ 65MHz
	t_{SKEW}	- 600	+ 600	ps	65MHz > Fclk ≥ 25MHz
LVDS Clock to Clock Skew Margin (Even to Odd)	t_{SKEW_EO}	- 1/7	+ 1/7	T_{clk}	-
Maximum deviation of input clock frequency during SSC	F_{DEV}	-	± 3	%	-
Maximum modulation frequency of input clock during SSC	F_{MOD}	-	200	KHz	-

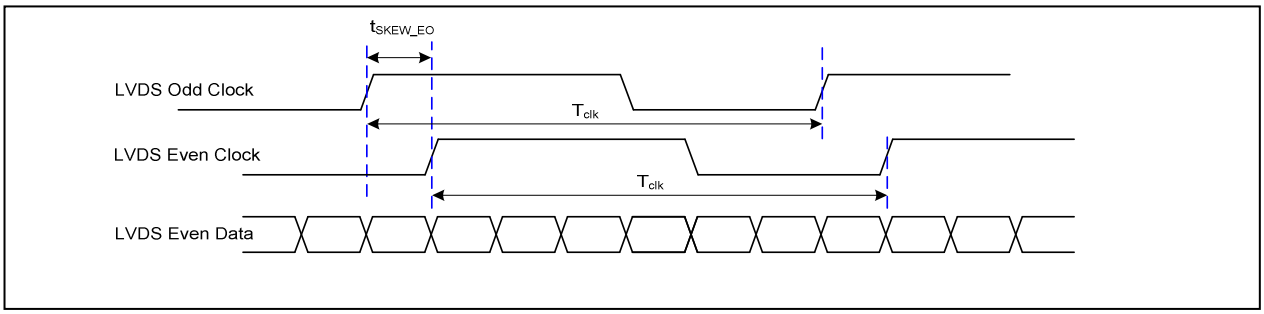

< Clock skew margin between channel >

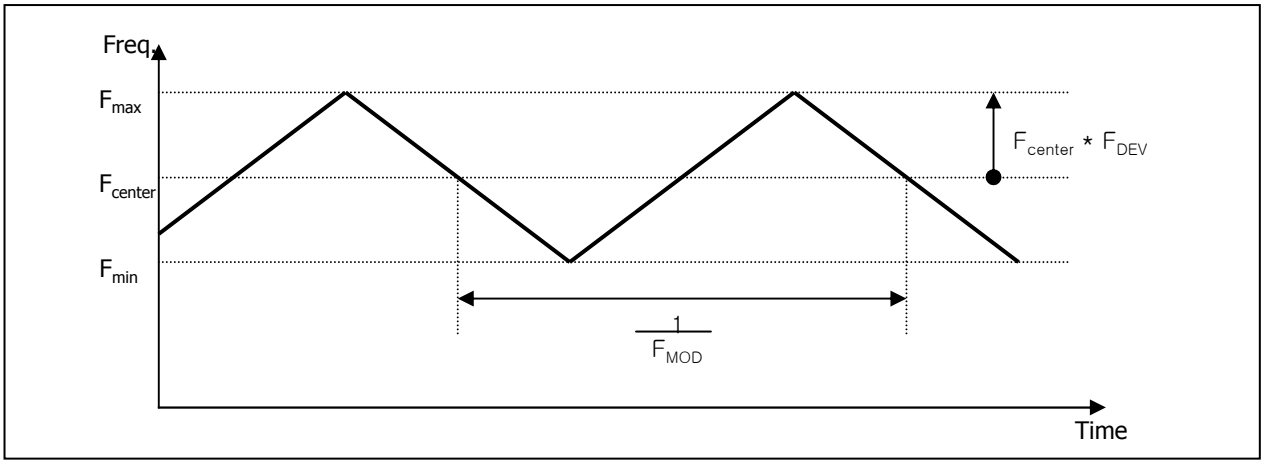

< Spread Spectrum >

3-3-3. Data Format

1) LVDS 1 Port

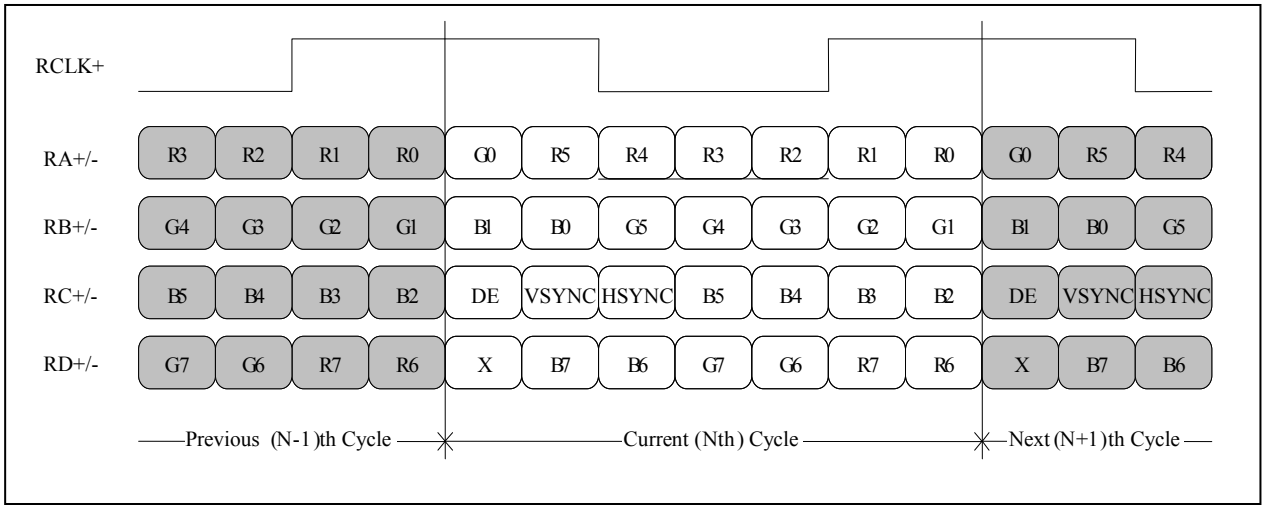

< LVDS Data Format >

3-4. Signal Timing Specifications

This is the signal timing required at the input of the User connector. All of the interface signal timing should be satisfied with the following specifications and specifications of LVDS Tx/Rx for its proper operation.

Table 6. TIMING TABLE

ITEM	Symbol		Min	Typ	Max	Unit	Note
DCLK	Frequency	f_{CLK}		72.5		MHz	
Hsync	Period	Thp	1280	1280	1280	Tclk	
	Width	t_{WH}	1420	1423	1460		
	Width-Active	t_{WHA}	16	32	48		
Vsync	Period	t_{VP}	800	800	800	tHP	
	Width	t_{WV}	811	846	847		
	Width-Active	t_{WVA}	3	6	9		
Data Enable	Horizontal back porch	t_{HBP}	54	63	98	tCLK	
	Horizontal front porch	t_{HFP}	16	48	62		
	Vertical back porch	t_{VBP}	5	37	35	tHP	
	Vertical front porch	t_{VFP}	3	3	3		

3-5. Signal Timing Waveforms

Condition : VCC =3.3V

Data Enable, Hsync, Vsync

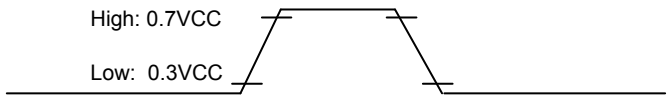

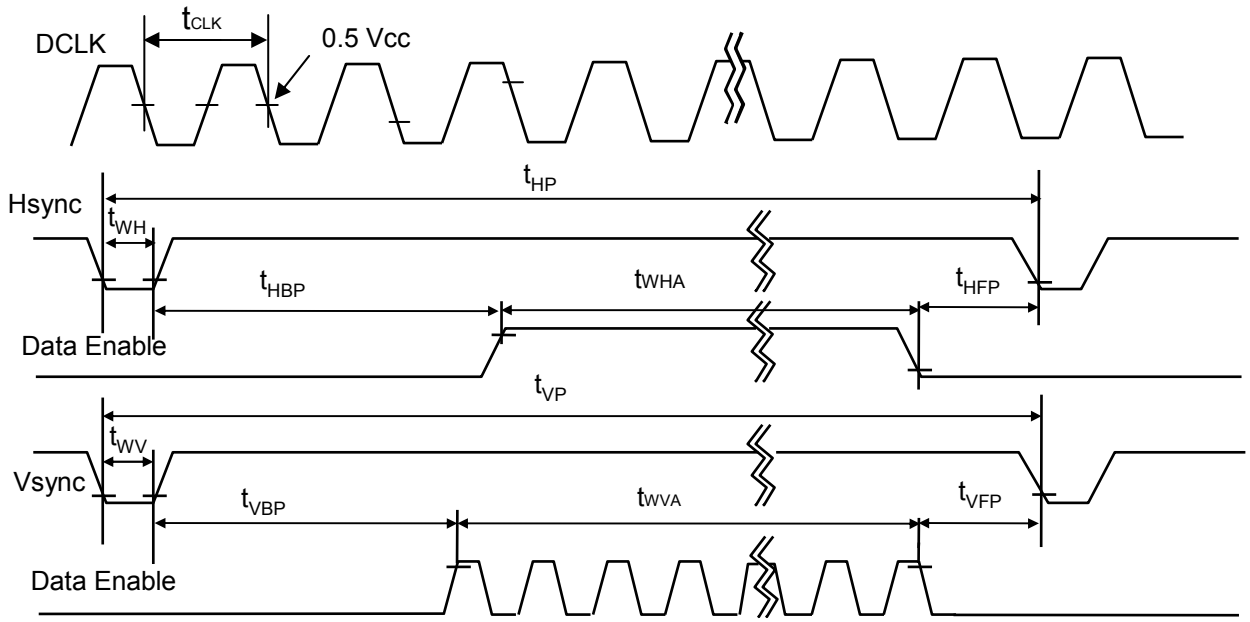

3-6. Color Input Data Reference

The brightness of each primary color (red,green and blue) is based on the 6-bit gray scale data input for the color ; the higher the binary input, the brighter the color. The table below provides a reference for color versus data input.

Table 7. COLOR DATA REFERENCE

Color		Input Color Data																	
		RED						GREEN						BLUE					
		MSB					LSB	MSB					LSB	MSB					LSB
		R 5	R 4	R 3	R 2	R 1	R 0	G 5	G 4	G 3	G 2	G 1	G 0	B 5	B 4	B 3	B 2	B 1	B 0
Basic Color	Black	0	0	0	0	0	0	0	0	0	0	0	0	0	0	0	0	0	0
	Red	1	1	1	1	1	1	0	0	0	0	0	0	0	0	0	0	0	0
	Green	0	0	0	0	0	0	1	1	1	1	1	1	0	0	0	0	0	0
	Blue	0	0	0	0	0	0	0	0	0	0	0	0	1	1	1	1	1	1
	Cyan	0	0	0	0	0	0	1	1	1	1	1	1	1	1	1	1	1	1
	Magenta	1	1	1	1	1	1	0	0	0	0	0	0	1	1	1	1	1	1
	Yellow	1	1	1	1	1	1	1	1	1	1	1	1	0	0	0	0	0	0
	White	1	1	1	1	1	1	1	1	1	1	1	1	1	1	1	1	1	1
RED	RED (00)	0	0	0	0	0	0	0	0	0	0	0	0	0	0	0	0	0	0
	RED (01)	0	0	0	0	0	1	0	0	0	0	0	0	0	0	0	0	0	0
	…	…						…						…					
	RED (62)	1	1	1	1	1	0	0	0	0	0	0	0	0	0	0	0	0	0
	RED (63)	1	1	1	1	1	1	0	0	0	0	0	0	0	0	0	0	0	0
GREEN	GREEN (00)	0	0	0	0	0	0	0	0	0	0	0	0	0	0	0	0	0	0
	GREEN (01)	0	0	0	0	0	0	0	0	0	0	0	1	0	0	0	0	0	0
	...	...						...						...					
	GREEN (62)	0	0	0	0	0	0	1	1	1	1	1	0	0	0	0	0	0	0
	GREEN (63)	0	0	0	0	0	0	1	1	1	1	1	1	0	0	0	0	0	0
BLUE	BLUE (00)	0	0	0	0	0	0	0	0	0	0	0	0	0	0	0	0	0	0
	BLUE (01)	0	0	0	0	0	0	0	0	0	0	0	0	0	0	0	0	0	1
	…	…						…						…					
	BLUE (62)	0	0	0	0	0	0	0	0	0	0	0	0	1	1	1	1	1	0
	BLUE (63)	0	0	0	0	0	0	0	0	0	0	0	0	1	1	1	1	1	1

3-7. Power Sequence

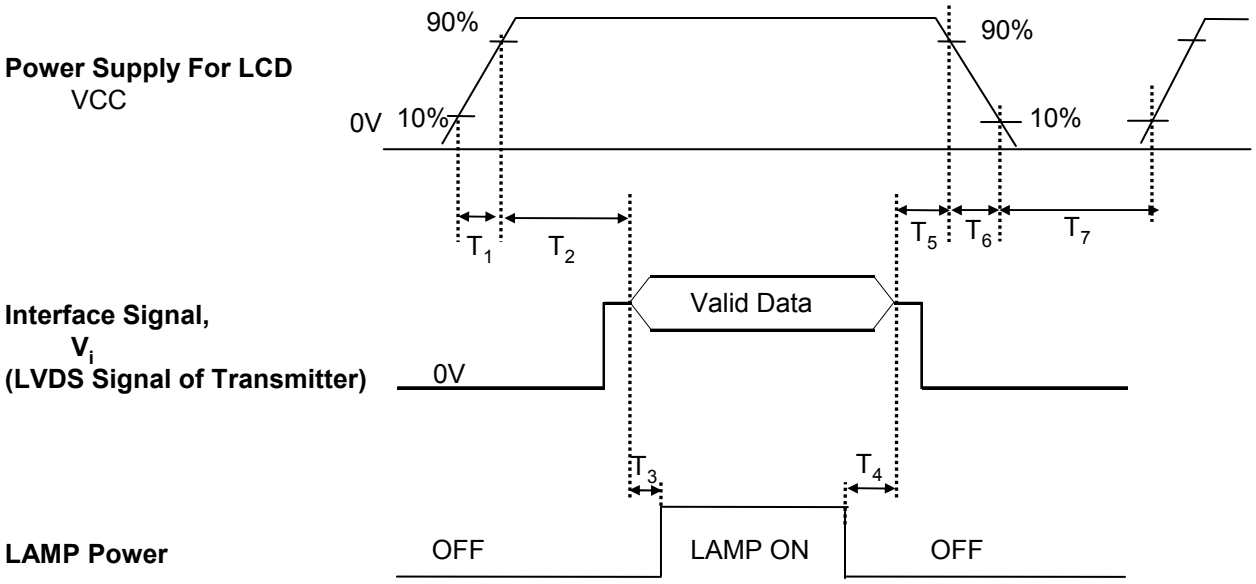

Table 8. POWER SEQUENCE TABLE

Parameter	Value			Units
	Min.	Typ.	Max.	
T_1	0	-	10	(ms)
T_2	0	-	50	(ms)
T_3	200	-	-	(ms)
T_4	200	-	-	(ms)
T_5	0	-	50	(ms)
T_6	0	-	10	(ms)
T_7	400	-	-	(ms)

Note)
1. Valid Data is Data to meet “3-3. LVDS Signal Timing Specifications”
2. Please avoid floating state of interface signal at invalid period.
3. When the interface signal is invalid, be sure to pull down the power supply for LCD VCC to 0V.
4. Lamp power must be turn on after power supply for LCD and interface signal are valid.

4. Optical Specification

Optical characteristics are determined after the unit has been 'ON' and stable for approximately 20 minutes in a dark environment at 25°C. The values specified are at an approximate distance 50cm from the LCD surface at a viewing angle of Φ and Θ equal to 0°.
FIG. 1 presents additional information concerning the measurement equipment and method.

FIG. 1 Optical Characteristic Measurement Equipment and Method

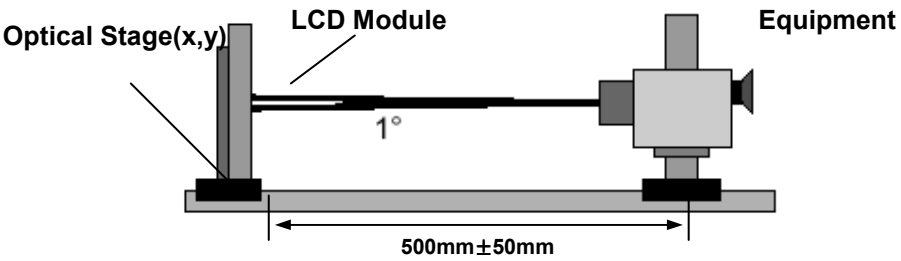

Table 9. OPTICAL CHARACTERISTICS

Ta=25°C, VCC=3.3V, fv=60Hz, f_{CLK}= 72.5MHz, ILED = 19mA

Parameter		Symbol	Condition	Min	Typ	Max	Units	Notes
Average Luminance		LAVE	160 Points (ILED= 19mA)	280	330	-	cd/㎡	Fig 2
Luminance variation		%	160 points	60	70	-	-	Fig 2
C/R		-	Center 1 Point	450	600	-	-	
Response time		TrR + TrD	-	-	16	25	㎳	Fig 3
Viewing angle	Horizontal	Θ	ϕx(Left,Right)		±70	-	°	Fig 4
	Vertical	Θ	ϕyu(Up)		60	-		
		Θ	ϕyd(Down)		60	-		
Worst neighbor Brightness uniformity		%		80				
White chromaticity deviation (W.R.T center)			d u'v'	-	-	0.0095		
White chromaticity deviation (Over panel)			d u'v'	-	-	0.0145		
White chromaticity deviation (Worst neighbor)			d u'v'	-	-	0.0035		
Cross Talk		DSHA	-	-	-	4.0	%	Fig 5
Gray Scale		-	-	Gamma 2.2				

Table 10. RGB Color Chromaticity

	White		Red		Green		Blue	
	Wx	Wy	Rx	Ry	Gx	Gy	Bx	By
Max.	0.338	0.354	TBD	TBD	TBD	TBD	TBD	TBD
Typ.	0.313	0.329	TBD	TBD	TBD	TBD	TBD	TBD
Min.	0.288	0.304	TBD	TBD	TBD	TBD	TBD	TBD

Notes)

1. Contrast Ratio(CR) is defined mathematically as

$$\text{Contrast Ratio} = \frac{\text{Surface Luminance with all white pixels}}{\text{Surface Luminance with all black pixels}}$$

2. Response time is the time required for the display to transition from white to black (rise time, Tr_R) and from black to white(Decay Time, Tr_D). For additional information see FIG 3.

3. Viewing angle is the angle at which the contrast ratio is greater than 10. The angles are determined for the horizontal or x axis and the vertical or y axis with respect to the z axis which is normal to the LCD surface. For more information see FIG 4.

4. Gray scale specification * f_V=60Hz

Gray Level	Luminance [%] (Typ)
L0	0.10
L7	0.71
L15	3.43
L23	8.90
L31	19.2
L39	31.9
L47	47.2
L55	71.2
L63	100

5. Average Luminance

Ave. = SUM(L1:L160) / 160

where L1 to L160 are the luminance values measured at point #1 to #160.

6. Luminance Uniformity

Luminance Uniformity:

U = 100% - (Lmax-Lmin)/Lmax

where, Lmax = max {Luminance values at 160 points},

Lmin = min {Luminance values at 160 points}

7. Worst neighbor Luminance Uniformity

Worst Neighbor Luminance Uniformity (The 4 points that are closest to the test point)

WNU=100%-Max(ΔL1, ΔL2, ΔL3, ΔL4)/L0

Global WNU = min (WNU1, …WNU160)

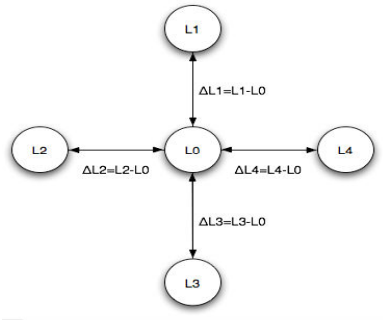

8. White chromaticity deviation – with respect to center

Center color coordinate is defined as the Average of points: 72, 73, 88, 89.

9. White chromaticity deviation – over panel

Maximum delta u'v' between any two measured points over the 160 points

10. White chromaticity deviation – worst neighbor

Maximum delta u'v' between any two neighboring points on the panel

11. White Chromaticity

Average (72, 73, 88, 89 Points)

12. RGB Chromaticity

Center Point

FIG. 2 Luminance

<Measuring point for Average Luminance & measuring point for Luminance variation>

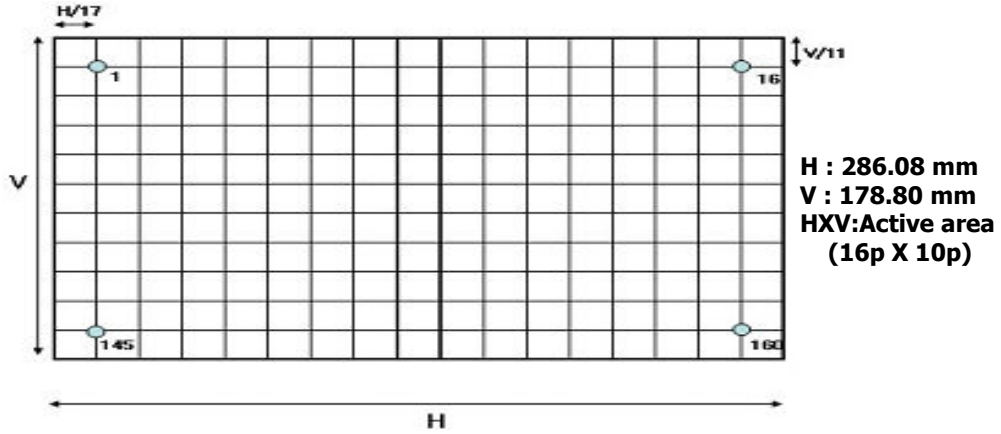

FIG. 3 Response Time

The response time is defined as the following figure and shall be measured by switching the input signal for “black” and “white”.

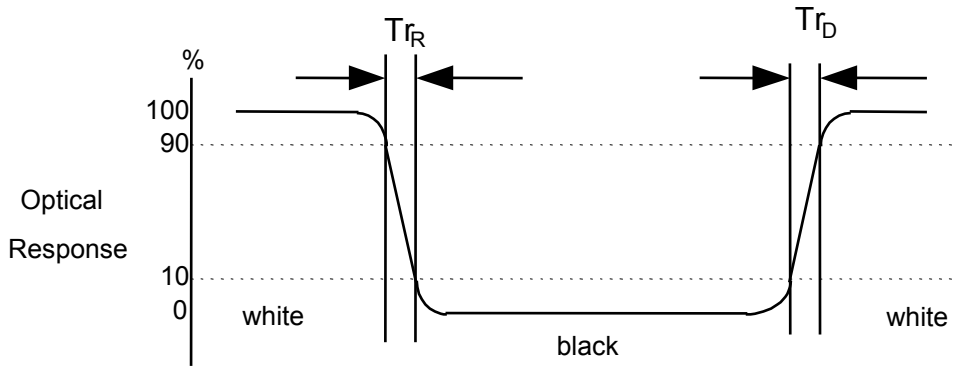

FIG. 4 Viewing angle

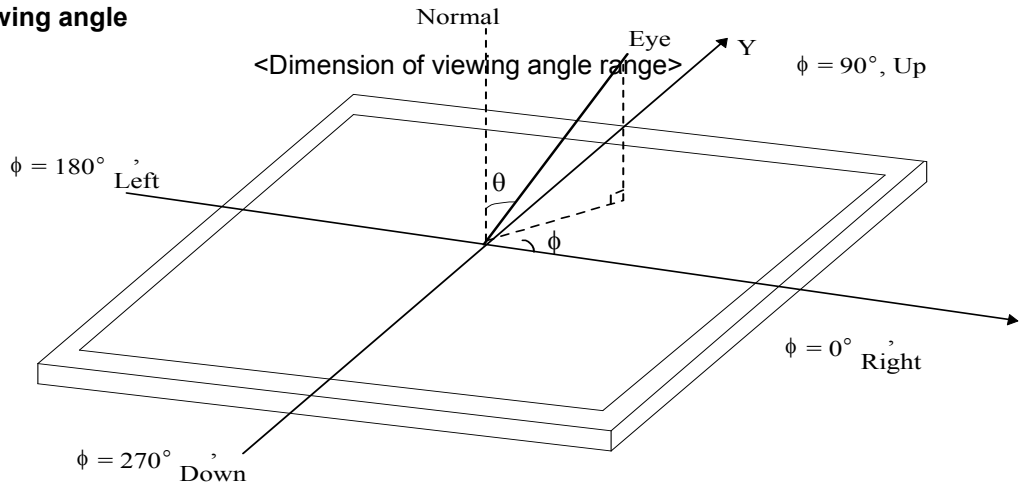

FIG. 5 Cross talk

No visual cross-talk will be allowed. Two luminance values are measured at center spot with 50 x 50 pixels. The cross-talk, D_{SHA}, is defined as,

$$D_{SHA} = (L_B - L_A)/L_B \cdot 100\%,$$

Where, L_A = Luminance in Pattern A

L_B = Luminance in Pattern B.

Pattern A

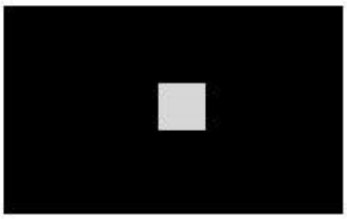

Pattern A
Gray Scale = 31 in center
Black in surrounding area

Pattern B

Pattern B
Gray Scale = 31 full screen

5. Mechanical Characteristics

The contents provide general mechanical characteristics for the model LP133WX2. In addition the figures in the next page are detailed mechanical drawing of the LCD.

Outline Dimension	Horizontal	297.15 ± 0.30mm
	Vertical	192.15 ± 0.30mm
	Thickness	3.75mm(Max.)
Bezel Area	Horizontal	289.38 mm
	Vertical	182.5mm
Active Display Area	Horizontal	286.08mm
	Vertical	178.80 mm
Weight	310g (Max.)	
Surface Treatment	Hard coating(2H), Glare treatment of the front Polarizer (Haze 0%)	

<FRONT VIEW>

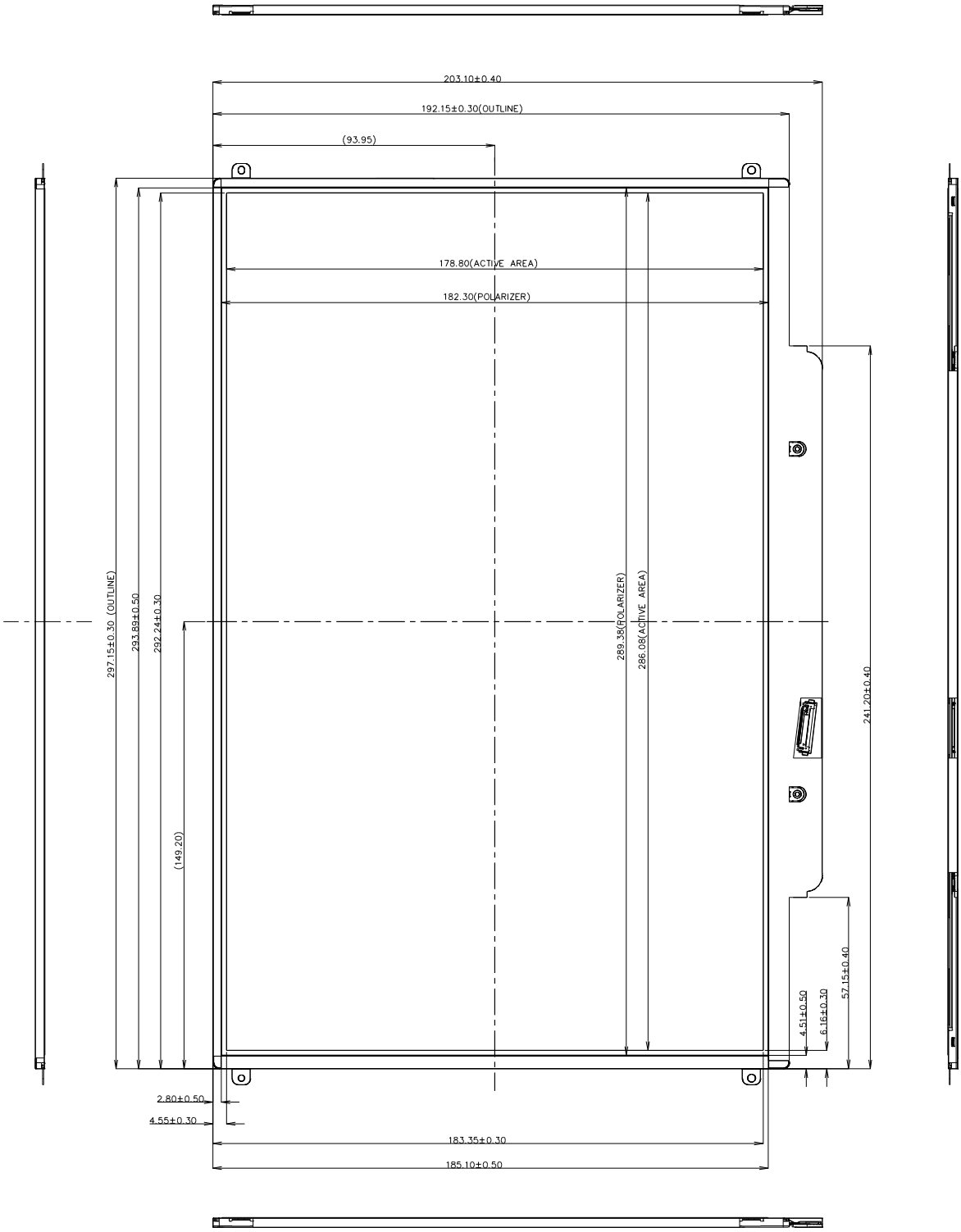
203.10±0.40
192.15±0.30(OUTLINE)
(93.95)
178.80(ACTIVE AREA)
182.30(POLARIZER)
297.15±0.30 (OUTLINE)
293.89±0.50
292.24±0.30
(149.20)
289.38(POLARIZER)
286.08(ACTIVE AREA)
241.20±0.40
57.15±0.40
4.51±0.50
6.16±0.30
2.80±0.50
4.55±0.30
183.35±0.30
185.10±0.50

<REAR VIEW>

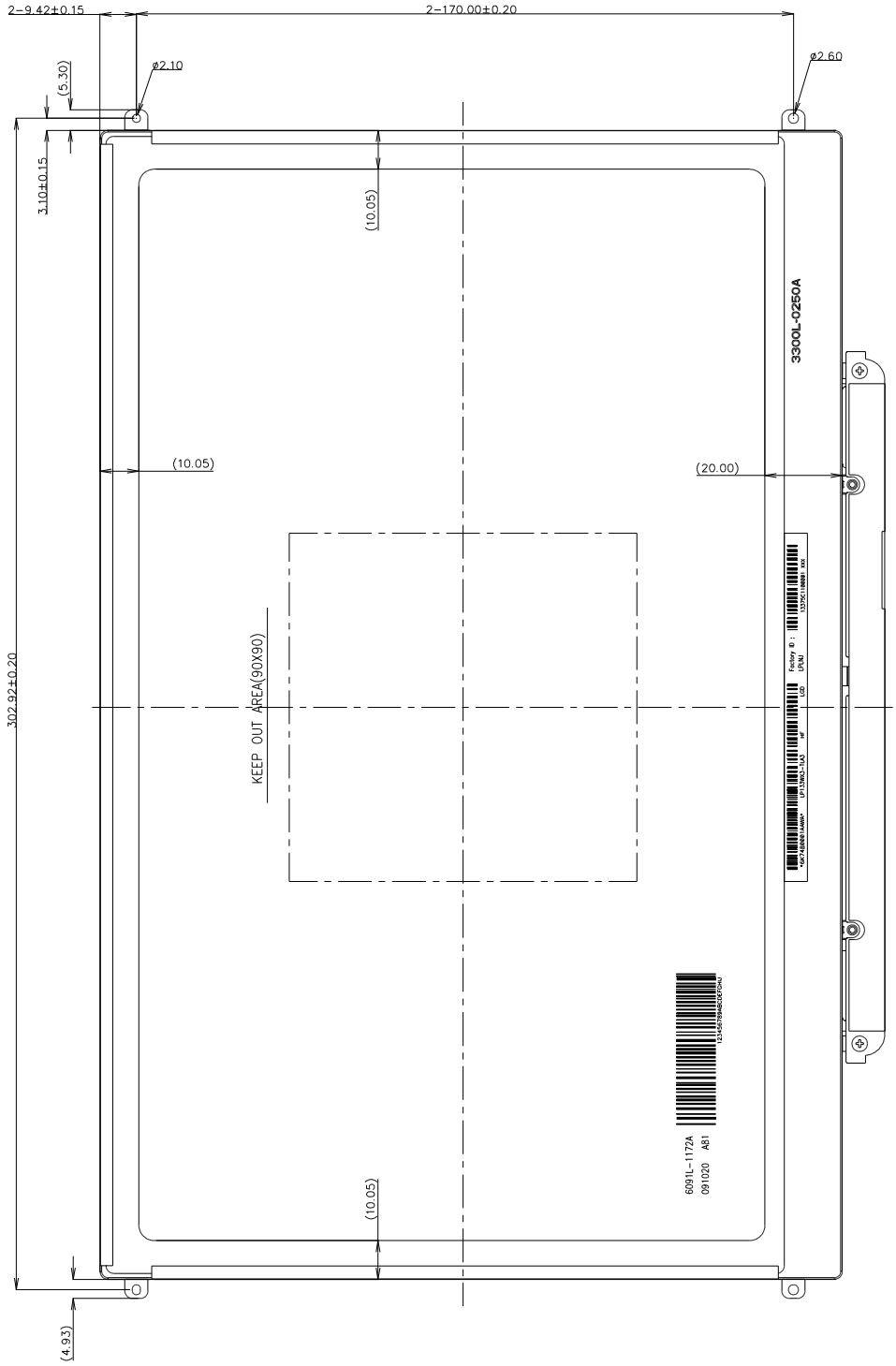
2-9.42±0.15
2-170.00±0.20
ø2.10
ø2.60
(5.30)
3.10±0.15
(10.05)
(10.05)
(20.00)
302.92±0.20
KEEP OUT AREA(90X90)
3300L-0250A
6091L-1172A
091020 A81
(10.05)
(4.93)

6. Reliability

Environment test condition

No.	Test Item	Conditions
1	High temperature storage test	Ta= 60°C, 240h
2	Low temperature storage test	Ta= -20°C, 240h
3	High temperature operation test	Ta= 50°C, 50%RH, 240h
4	Low temperature operation test	Ta= 0°C, 240h
5	Vibration test (non-operating)	Sine wave, 10 ~ 500 ~ 10Hz, 1.5G, 0.37oct/min 3 axis, 1hour/axis
6	Shock test (non-operating)	Half sine wave, 180G, 2ms one shock of each six faces(I.e. run 180G 6ms for all six faces)
7	Altitude operating storage / shipment	0 ~ 10,000 feet (3,048m) 24Hr 0 ~ 40,000 feet (12,192m) 24Hr

{ Result Evaluation Criteria }
There should be no change which might affect the practical display function when the display quality test is conducted under normal operating condition.

7. International Standards

7-1. Safety

a) UL 60950-1:2003, First Edition, Underwriters Laboratories, Inc.,
Standard for Safety of Information Technology Equipment.
b) CAN/CSA C22.2, No. 60950-1-03 1st Ed. April 1, 2003, Canadian Standards Association,
Standard for Safety of Information Technology Equipment.
c) EN 60950-1:2001, First Edition,
European Committee for Electrotechnical Standardization(CENELEC)
European Standard for Safety of Information Technology Equipment.

7-2. EMC

a) ANSI C63.4 “Methods of Measurement of Radio-Noise Emissions from Low-Voltage Electrical and Electrical Equipment in the Range of 9kHZ to 40GHz. “American National Standards Institute(ANSI), 1992
b) C.I.S.P.R “Limits and Methods of Measurement of Radio Interface Characteristics of Information Technology Equipment.“ International Special Committee on Radio Interference.
c) EN 55022 “Limits and Methods of Measurement of Radio Interface Characteristics of Information Technology Equipment.“ European Committee for Electrotechnical Standardization.(CENELEC), 1998
(Including A1: 2000)

8. Packing

8-1. Designation of Lot Mark

a) Lot Mark

A	B	C	D	E	F	G	H	I	J	K	L	M

A,B,C : SIZE(INCH)
E : MONTH
D : YEAR
F ~ M : SERIAL NO.

Note

1. YEAR

Year	2001	2002	2003	2004	2005	2006	2007	2008	2009	2010
Mark	1	2	3	4	5	6	7	8	9	0

2. MONTH

Month	Jan	Feb	Mar	Apr	May	Jun	Jul	Aug	Sep	Oct	Nov	Dec
Mark	1	2	3	4	5	6	7	8	9	A	B	C

b) Location of Lot Mark

Serial No. is printed on the label. The label is attached to the backside of the LCD module.
This is subject to change without prior notice.

8-2. Packing Form

a) Package quantity in one box : 20 pcs

b) Box Size : 422mm × 340mm × 257mm

9. PRECAUTIONS

Please pay attention to the followings when you use this TFT LCD module.

9-1. MOUNTING PRECAUTIONS

(1) You must mount a module using holes arranged in four corners or four sides.
(2) You should consider the mounting structure so that uneven force (ex. Twisted stress) is not applied to the module. And the case on which a module is mounted should have sufficient strength so that external force is not transmitted directly to the module.
(3) Please attach the surface transparent protective plate to the surface in order to protect the polarizer. Transparent protective plate should have sufficient strength in order to the resist external force.
(4) You should adopt radiation structure to satisfy the temperature specification.
(5) Acetic acid type and chlorine type materials for the cover case are not desirable because the former generates corrosive gas of attacking the polarizer at high temperature and the latter causes circuit break by electro-chemical reaction.
(6) Do not touch, push or rub the exposed polarizers with glass, tweezers or anything harder than HB pencil lead. And please do not rub with dust clothes with chemical treatment.
Do not touch the surface of polarizer for bare hand or greasy cloth.(Some cosmetics are detrimental to the polarizer.)
(7) When the surface becomes dusty, please wipe gently with absorbent cotton or other soft materials like chamois soaks with petroleum benzene. Normal-hexane is recommended for cleaning the adhesives used to attach front / rear polarizers. Do not use acetone, toluene and alcohol because they cause chemical damage to the polarizer.
(8) Wipe off saliva or water drops as soon as possible. Their long time contact with polarizer causes deformations and color fading.
(9) Do not open the case because inside circuits do not have sufficient strength.

9-2. OPERATING PRECAUTIONS

(1) The spike noise causes the mis-operation of circuits. It should be lower than following voltage :
V=± 200mV(Over and under shoot voltage)

(2) Response time depends on the temperature.(In lower temperature, it becomes longer.)
(3) Brightness depends on the temperature. (In lower temperature, it becomes lower.)
And in lower temperature, response time(required time that brightness is stable after turned on) becomes longer.
(4) Be careful for condensation at sudden temperature change. Condensation makes damage to polarizer or electrical contacted parts. And after fading condensation, smear or spot will occur.
(5) When fixed patterns are displayed for a long time, remnant image is likely to occur.
(6) Module has high frequency circuits. Sufficient suppression to the electromagnetic interference shall be done by system manufacturers. Grounding and shielding methods may be important to minimized the interference.

9-3. ELECTROSTATIC DISCHARGE CONTROL

Since a module is composed of electronic circuits, it is not strong to electrostatic discharge. Make certain that treatment persons are connected to ground through wrist band etc. And don't touch interface pin directly.

9-4. PRECAUTIONS FOR STRONG LIGHT EXPOSURE

Strong light exposure causes degradation of polarizer and color filter.

9-5. STORAGE

When storing modules as spares for a long time, the following precautions are necessary.

(1) Store them in a dark place. Do not expose the module to sunlight or fluorescent light. Keep the temperature between 5°C and 35°C at normal humidity.
(2) The polarizer surface should not come in contact with any other object.
It is recommended that they be stored in the container in which they were shipped.

9-6. HANDLING PRECAUTIONS FOR PROTECTION FILM

(1) When the protection film is peeled off, static electricity is generated between the film and polarizer. This should be peeled off slowly and carefully by people who are electrically grounded and with well ion-blown equipment or in such a condition, etc.
(2) The protection film is attached to the polarizer with a small amount of glue. If some stress is applied to rub the protection film against the polarizer during the time you peel off the film, the glue is apt to remain on the polarizer.
Please carefully peel off the protection film without rubbing it against the polarizer.
(3) When the module with protection film attached is stored for a long time, sometimes there remains a very small amount of glue still on the polarizer after the protection film is peeled off.
(4) You can remove the glue easily. When the glue remains on the polarizer surface or its vestige is recognized, please wipe them off with absorbent cotton waste or other soft material like chamois soaked with normal-hexane.

APPENDIX A. Enhanced Extended Display Identification Data (EEDID™) 1/3

Byte# (decimal)	Byte# (HEX)	Field Name and Comments	Value (HEX)		Value (binary)	
0	00	Header	0	0	0000 0000	Header
1	01	Header	F	F	1111 1111	
2	02	Header	F	F	1111 1111	
3	03	Header	F	F	1111 1111	
4	04	Header	F	F	1111 1111	
5	05	Header	F	F	1111 1111	
6	06	Header	F	F	1111 1111	
7	07	Header	0	0	0000 0000	
8	08	EISA manufacturer code(3 Character ID) = APP	0	6	0000 0110	Vender/ Product ID
9	09	Compressed ASCII	1	0	0001 0000	
10	0A	Product code(Refer to Apple's request) = K6(0x9cc3)	C	3	1100 0011	
11	0B	(Hex, LSB first)	9	C	1001 1100	
12	0C	LCD module Serial No – Preferred but Optional (“0” if not used)	0	0	0000 0000	
13	0D	LCD module Serial No – Preferred but Optional (“0” if not used)	0	0	0000 0000	
14	0E	LCD module Serial No – Preferred but Optional (“0” if not used)	0	0	0000 0000	
15	0F	LCD module Serial No – Preferred but Optional (“0” if not used)	0	0	0000 0000	
16	10	Week of Manufacture = Jul. 24th 28week	1	C	0001 1100	
17	11	Year of Manufacture = 2009	1	3	0001 0011	
18	12	EDID Structure version # = 1	0	1	0000 0001	EDID Version/ Revision
19	13	3	0	3	0000 0011	
20	14	Video Input Definition = Digital I/P,non TMDS CRGB	8	0	1000 0000	Display Parameter
21	15	Max H image size(㎝)=28.608cm(29)	1	D	0001 1101	
22	16	Max V image size(㎝)=17.880cm(18)	1	2	0001 0010	
23	17	Display gamma =2.2	7	8	0111 1000	
24	18	Feature support(DPMS) = Active off, RGB Color	0	A	0000 1010	
25	19	Red/Green low Bits	0	0	0000 0000	Color Characteristic
26	1A	Blue/White Low Bits	0	0	0000 0000	
27	1B	Red X =	0	0	0000 0000	
28	1C	Red Y =	0	0	0000 0000	
29	1D	Green X =	0	0	0000 0000	
30	1E	Green Y =	0	0	0000 0000	
31	1F	Blue X =	0	0	0000 0000	
32	20	Blue Y =	0	0	0000 0000	
33	21	White X = 0.313	5	0	0101 0000	
34	22	White Y = 0.329	5	4	0101 0100	
35	23	Established Timing I = 00h(If not used)	0	0	0000 0000	Established Timings
36	24	Established Timing II = 00h(If not used)	0	0	0000 0000	
37	25	Manufacturer's Timings = 00h(If not used)	0	0	0000 0000	
38	26	Standard Timing Identification 1 was not used	0	1	0000 0001	Standard Timing ID
39	27	Standard Timing Identification 1 was not used	0	1	0000 0001	
40	28	Standard Timing Identification 2 was not used	0	1	0000 0001	
41	29	Standard Timing Identification 2 was not used	0	1	0000 0001	
42	2A	Standard Timing Identification 3 was not used	0	1	0000 0001	
43	2B	Standard Timing Identification 3 was not used	0	1	0000 0001	
44	2C	Standard Timing Identification 4 was not used	0	1	0000 0001	
45	2D	Standard Timing Identification 4 was not used	0	1	0000 0001	
46	2E	Standard Timing Identification 5 was not used	0	1	0000 0001	
47	2F	Standard Timing Identification 5 was not used	0	1	0000 0001	
48	30	Standard Timing Identification 6 was not used	0	1	0000 0001	
49	31	Standard Timing Identification 6 was not used	0	1	0000 0001	
50	32	Standard Timing Identification 7 was not used	0	1	0000 0001	
51	33	Standard Timing Identification 7 was not used	0	1	0000 0001	
52	34	Standard Timing Identification 8 was not used	0	1	0000 0001	
53	35	Standard Timing Identification 8 was not used	0	1	0000 0001	

APPENDIX A. Enhanced Extended Display Identification Data (EEDID™) 2/3

Byte# (decimal)	Byte# (HEX)	Field Name and Comments	Value (HEX)		Value (binary)	
54	36	Pixel Clock/10,000 (LSB) 72.5 MHz @60.2Hz	5	2	0101 0010	Timing Descriptor #1
55	37	Pixel Clock/10,000 (MSB)	1	C	0001 1100	
56	38	Horizontal Active (lower 8 bits) 1280 Pixels	0	0	0000 0000	
57	39	Horizontal Blanking(Thp-HA) (lower 8 bits) 143 Pixels	8	F	1000 1111	
58	3A	Horizontal Active / Horizontal Blanking(Thp-HA) (upper 4:4bits)	5	0	0101 0000	
59	3B	Vertical Avtive 800 Lines	2	0	0010 0000	
60	3C	Vertical Blanking (Tvp-HA) (DE Blanking typ.for DE only panels) 46 Lines	2	E	0010 1110	
61	3D	Vertical Active : Vertical Blanking (Tvp-HA) (upper 4:4bits)	3	0	0011 0000	
62	3E	Horizontal Sync. Offset (Thfp) 48 Pixels	3	0	0011 0000	
63	3F	Horizontal Sync Pulse Width (HSPW) 32 Pixels	2	0	0010 0000	
64	40	Vertical Sync Offset(Tvfp) : Sync Width (VSPW) 3 Lines : 6 Lines	3	6	0011 0110	
65	41	Horizontal Vertical Sync Offset/Width (upper 2bits)	0	0	0000 0000	
66	42	Horizontal Image Size = 286.08mm(286)	1	E	0001 1110	
67	43	Vertical Image Size = 178.80cm(179)	B	3	1011 0011	
68	44	Horizontal & Vertical Image Size	1	0	0001 0000	
69	45	Horizontal Border = 0	0	0	0000 0000	
70	46	Vertical Border = 0	0	0	0000 0000	
71	47	Non-interlaced,Normal display,no stereo,Digital separate sync,H/V pol negatives	1	8	0001 1000	
72	48	Detailed Timing Descriptor #2	0	0	0000 0000	Timing Description #2
73	49		0	0	0000 0000	
74	4A		0	0	0000 0000	
75	4B		0	1	0000 0001	
76	4C	Version	0	0	0000 0000	
77	4D	Apple edid signature	0	6	0000 0110	
78	4E	Apple edid signature	1	0	0001 0000	
79	4F	Link Type	2	0	0010 0000	
80	50	Pixel and link component format(6-bit panel interface)	0	0	0000 0000	
81	51	Panel features(Inverter NA, no inverter)	0	0	0000 0000	
82	52		0	0	0000 0000	
83	53		0	0	0000 0000	
84	54		0	0	0000 0000	
85	55		0	0	0000 0000	
86	56		0	0	0000 0000	
87	57		0	0	0000 0000	
88	58		0	A	0000 1010	
89	59		2	0	0010 0000	
90	5A	Detailed Timing Descriptor #3	0	0	0000 0000	Timing Description #3
91	5B		0	0	0000 0000	
92	5C		0	0	0000 0000	
93	5D		F	E	1111 1110	
94	5E		0	0	0000 0000	
95	5F	L	4	C	0100 1100	
96	60	P	5	0	0101 0000	
97	61	1	3	1	0011 0001	
98	62	3	3	3	0011 0011	
99	63	3	3	3	0011 0011	
100	64	W	5	7	0101 0111	
101	65	X	5	8	0101 1000	
102	66	3	3	3	0011 0011	
103	67	-	2	D	0010 1101	
104	68	T	5	4	0101 0100	
105	69	L	4	C	0100 1100	
106	6A	A	4	1	0100 0001	
107	6B	3	3	3	0011 0011	

APPENDIX A. Enhanced Extended Display Identification Data (EEDID™) 3/3

Byte# (decimal)	Byte# (HEX)	Field Name and Comments	Value (HEX)		Value (binary)	
108	6C	Detailed Timing Descriptor #4	0	0	0000 0000	Timing Description #4
109	6D		0	0	0000 0000	
110	6E		0	0	0000 0000	
111	6F		F	E	1111 1110	
112	70		0	0	0000 0000	
113	71	C	4	3	0100 0011	
114	72	o	6	F	0110 1111	
115	73	l	6	C	0110 1100	
116	74	o	6	F	0110 1111	
117	75	r	7	2	0111 0010	
118	76	SPACE	2	0	0010 0000	
119	77	L	4	C	0100 1100	
120	78	C	4	3	0100 0011	
121	79	D	4	4	0100 0100	
122	7A	LF	0	A	0000 1010	
123	7B	SPACE	2	0	0010 0000	
124	7C	SPACE	2	0	0010 0000	
125	7D	SPACE	2	0	0010 0000	
126	7E	Extension flag = 00	0	0	0000 0000	Extension Flag
127	7F	Checksum	2	0	0010 0000	Checksum