SPECIFICATION
FOR
APPROVAL

(●) **Preliminary Specification**
( ) **Final Specification**

Title	13.3” HD TFT LCD

BUYER	LENOVO
MODEL	

SUPPLIER	LG Display Co., Ltd.
*MODEL	LP133WH2
Suffix	TLN4

*When you obtain standard approval,
please use the above model name without suffix

APPROVED BY	SIGNATURE
/	
/	
/	

Please return 1 copy for your confirmation with your signature and comments.

APPROVED BY	SIGNATURE
K. J. KWON / S.Manager	
REVIEWED BY	
G. J. Han / Manager	
PREPARED BY	
H. M. Yoon / Engineer **T. S. Yoon / Engineer**	

Product Engineering Dept.
LG Display Co., Ltd

Contents

No	ITEM	Page
	COVER	
	CONTENTS	2
	RECORD OF REVISIONS	3
1	GENERAL DESCRIPTION	4
2	ABSOLUTE MAXIMUM RATINGS	5
3	ELECTRICAL SPECIFICATIONS	
3-1	ELECTRICAL CHARACTREISTICS	6
3-2	INTERFACE CONNECTIONS	7
3-3	SIGNAL TIMING SPECIFICATIONS	9
3-4	SIGNAL TIMING WAVEFORMS	9
3-5	COLOR INPUT DATA REFERNECE	10
3-6	POWER SEQUENCE	11
4	OPTICAL SFECIFICATIONS	12
5	MECHANICAL CHARACTERISTICS	16
6	RELIABLITY	19
7	INTERNATIONAL STANDARDS	
7-1	SAFETY	20
7-2	EMC	20
8	PACKING	
8-1	DESIGNATION OF LOT MARK	21
8-2	PACKING FORM	21
9	PRECAUTIONS	22
A	APPENDIX A. Enhanced Extended Display Identification Data	24

RECORD OF REVISIONS

Revision No	Revision Date	Page	Description	EDID ver
0.0	28. Jul. 2009	-	First Draft	0.0
0.1	24. Aug, 2009	18-19	Updated mechanic diagram	0.1
		25-27	Updated EDID Data	
0.2	2. Sep, 2009	14	Updated Color coordinates	0.2
		25-27	Updated EDID Data	

1. General Description

The LP133WH2 is a Color Active Matrix Liquid Crystal Display with an integral LED backlight system. The matrix employs a-Si Thin Film Transistor as the active element. It is a transmissive type display operating in the normally white mode. This TFT-LCD has 13.3 inches diagonally measured active display area with HD resolution(1366 horizontal by 768 vertical pixel array). Each pixel is divided into Red, Green and Blue sub-pixels or dots which are arranged in vertical stripes. Gray scale or the brightness of the sub-pixel color is determined with a 6-bit gray scale signal for each dot, thus, presenting a palette of more than 262,144 colors.

The LP133WH2 has been designed to apply the interface method that enables low power, high speed, low EMI.

The LP133WH2 is intended to support applications where thin thickness, low power are critical factors and graphic displays are important. In combination with the vertical arrangement of the sub-pixels, the LP133WH2 characteristics provide an excellent flat display for office automation products such as Notebook PC.

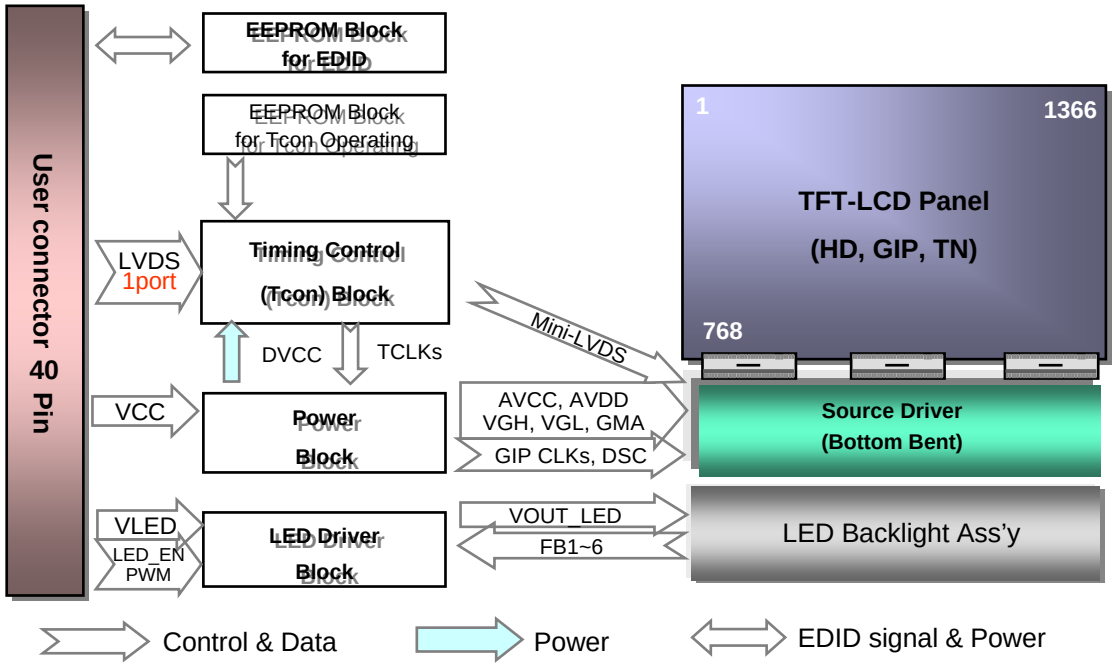

General Features

Active Screen Size	13.3 inches diagonal
Outline Dimension	306.3(Typ. H) × 177.7(Typ. V) × 3.6(D, Max.) mm
Pixel Pitch	0.2148 × 0.2148 mm
Pixel Format	1366 horiz. by 768 vert. Pixels RGB strip arrangement
Color Depth	6-bit, 262,144 colors
Luminance, White	200 cd/m^2(Typ., @I_{LED}=17mA)
Power Consumption	Logic : 1.8 W (Max.@Mosaic), Back Light : 2.75W (Max.@ I_{LED}=17mA)
Weight	300g(Max.)
Display Operating Mode	Transmissive mode, normally white
Surface Treatment	Glare treatment of the front Polarizer (Haze 0%)
RoHS Comply	Yes
BFR / PVC / As Free	Yes all.

2. Absolute Maximum Ratings

The following are maximum values which, if exceeded, may cause faulty operation or damage to the unit.

Table 1. ABSOLUTE MAXIMUM RATINGS

Parameter	Symbol	Values		Units	Notes
		Min	Max		
Power Input Voltage	VCC	-0.3	4.0	Vdc	at 25 ± 5°C
Operating Temperature	TOP	0	50	°C	1
Storage Temperature	HST	-20	60	°C	1
Operating Ambient Humidity	HOP	10	90	%RH	1
Storage Humidity	HST	10	90	%RH	1

Note : 1. Temperature and relative humidity range are shown in the figure below.
Wet bulb temperature should be 39°C Max, and no condensation of water.

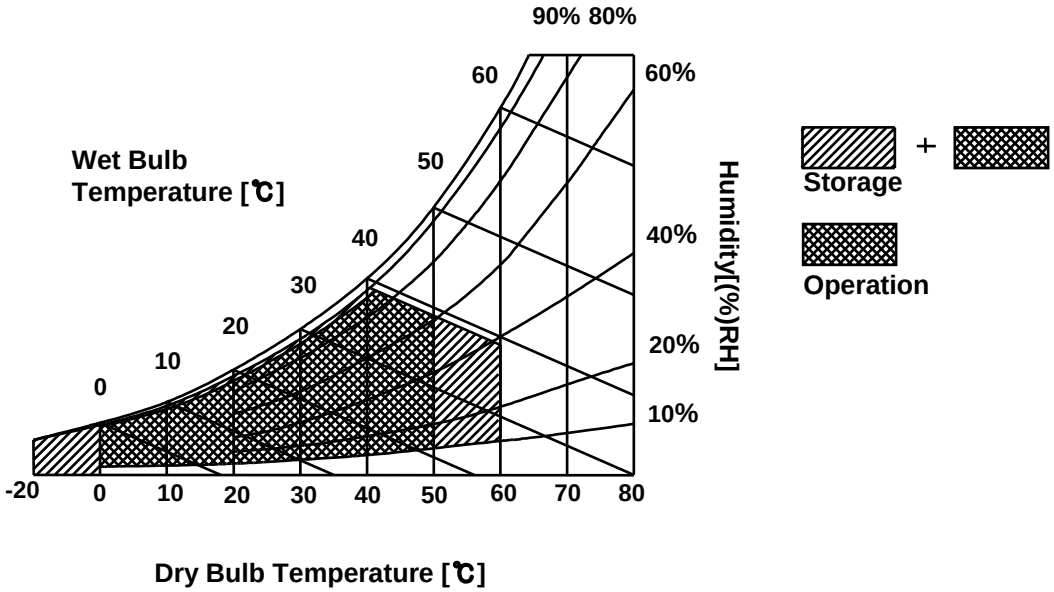

3. Electrical Specifications

3-1. Electrical Characteristics

The LP33WH2 requires two power inputs. The first logic is employed to power the LCD electronics and to drive the TFT array and liquid crystal. The second backlight is the input about LED BL.with LED Driver.

Table 2. ELECTRICAL CHARACTERISTICS

Parameter		Symbol	Values			Unit	Notes
			Min	Typ	Max		
LOGIC :							
Power Supply Input Voltage		V_{CC}	3.0	3.3	3.6	V	1
Power Supply Input Current	Mosaic	I_{CC}	-	500	560	mA	2
Power Consumption		P_{CC}	-	1.6	1.8	W	2
Power Supply Inrush Current		I_{CC_P}	-		1800	mA	4
LVDS Impedance		Z_{LVDS}	90	100	110	Ω	5
BACKLIGHT : (with LED Driver)							
LED Power Input Voltage		V_{LED}	7.0	12.0	20.0	V	6
LED Power Input Current		I_{LED}	-		235	mA	7
LED Power Consumption		P_{LED}	-		2.75	W	7
LED Power Inrush Current		I_{LED_P}	-		1000	mA	8
PWM Duty Ratio			5	-	100	%	9
PWM Jitter		-	0	-	0.2	%	10
PWM Impedance		Z_{PWM}	20	40	60	kΩ	
PWM Frequency		F_{PWM}	200	-	1000	Hz	11
PWM High Level Voltage		V_{PWM_H}	3.0	-	5.3	V	
PWM Low Level Voltage		V_{PWM_L}	0	-	0.5	V	
LED_EN Impedance		Z_{PWM}	20	40	60	kΩ	
LED_EN High Voltage		$V_{LED_EN_H}$	3.0	-	5.3	V	
LED_EN Low Voltage		$V_{LED_EN_L}$	0	-	0.5	V	
Life Time			12,000	-	-	Hrs	12

Note)

1. The measuring position is the connector of LCM and the test conditions are under 25℃, fv = 60Hz, Black pattern.
2. The specified Icc current and power consumption are under the Vcc = 3.3V , 25℃, fv = 60Hz condition whereas Mosaic pattern is displayed and fv is the frame frequency.
   (Max current pattern is Black.)

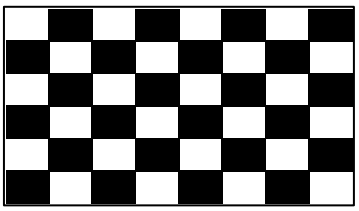

3. This Spec. is the max load condition for the cable impedance designing.
4. The below figures are the measuring Vcc condition and the Vcc control block LGD used.
   The Vcc condition is same the minimum of T1 at Power on sequence.

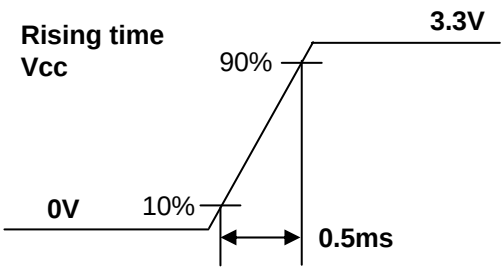

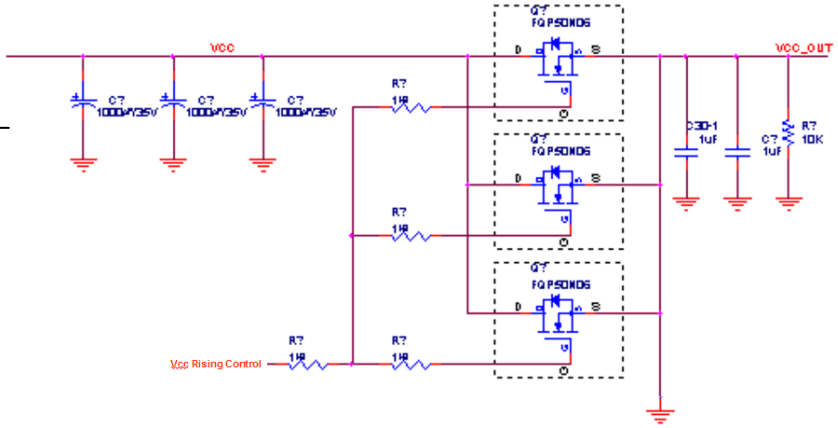

5. This impedance value is needed to proper display and measured form LVDS Tx to the mating connector.
6. The measuring position is the connector of LCM and the test conditions are under 25℃.
7. The current and power consumption with LED Driver are under the Vled = 12.0V , 25℃, Dimming of Max luminance whereas White pattern is displayed and fv is the frame frequency.
8. The below figures are the measuring Vled condition and the Vled control block LGD used.
   VLED control block is same with Vcc control block.

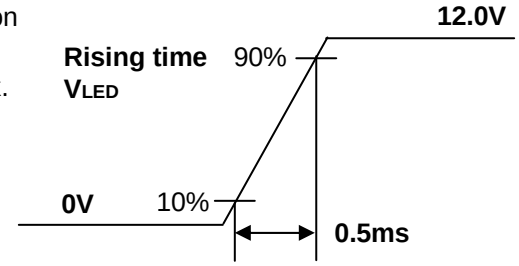

9. The operation of LED Driver below minimum dimming ratio may cause flickering or reliability issue.
10. If Jitter of PWM is bigger than maximum. It may cause flickering.
11. This Spec. is not effective at 100% dimming ratio as an exception because it has DC level equivalent to 0Hz. In spite of acceptable range as defined, the PWM Frequency should be fixed and stable for more consistent brightness control at any specific level desired.
12 The life time is determined as the time at which the typical brightness of LCD is 50% compare to that of initial value at the typical LED current. These LED backlight has 6 strings on it and the typical current of LED's string is base on 16mA.

3-2. Interface Connections

This LCD employs two interface connections, a 40 pin connector is used for the module electronics interface and the other connector is used for the integral backlight system.
The electronics interface connector is a model KN38-40S-0.5H manufactured by HIROSE.

Table 3. MODULE CONNECTOR PIN CONFIGURATION (CN1)

Pin	Symbol	Description
1	NC	No Connection
2	VDD	Power Supply +3.3V
3	VDD	Power Supply +3.3V
4	VEDID	EDID +3.3V Power
5	NC	Reserved (BIST)
6	CLKEDID	EDID Clock Input
7	DATAEDID	EDID Data Input
8	Odd Rx IN0-	-LVDS Differential Data INPUT(R0-R5,G0)
9	Odd Rx IN0+	+LVDS Differential Data INPUT(R0-R5,G0)
10	VSS	Ground
11	Odd Rx IN1-	-LVDS Differential Data INPUT(G1-G5,B0-B1)
12	Odd Rx IN1+	+LVDS Differential Data INPUT(G1-G5,B0-B1)
13	VSS	Ground
14	Odd Rx IN2-	-LVDS Differential Data INPUT(B2-B5,HS,VS,DE)
15	Odd Rx IN2+	+LVDS Differential Data INPUT(B2-B5,HS,VS,DE)
16	VSS	Ground
17	Odd Rx CKIN-	-LVDS Differential Clock INPUT
18	Odd Rx CKIN+	+LVDS Differential Clock INPUT
19	VSS	Ground
20	NC	No Connection
21	NC	No Connection
22	GND	Ground
23	NC	No Connection
24	NC	No Connection
25	GND	Ground
26	NC	No Connection
27	NC	No Connection
28	GND	Ground
29	NC	No Connection
30	NC	No Connection
31	VLED_GND	LED Ground
32	VLED_GND	LED Ground
33	VLED_GND	LED Ground
34	NC	No Connection
35	BLIM	PWM for luminance control
36	BL_on	Backlight On/Off Control (on: 2.5V~3.V, off: 0~0.5V)
37	NC	Reserved
38	VLED	LED Power Supply 7V-20V
39	VLED	LED Power Supply 7V-20V
40	VLED	LED Power Supply 7V-20V

[Interface Chip]
1. LCD :
SW, Dual LVDS Receiver.
2. System : SiWLVDSRx or equivalent
* Pin to Pin compatible with LVDS

[Connector]
KN38-40S-0.5H or equivalent

[Mating Connector]
20453-040T-0x, I-PEX
or equivalent.

[Connector pin arrangement]

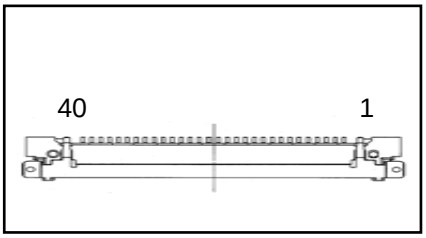

3-3. LVDS Signal Timing Specifications

3-3-1. DC Specification

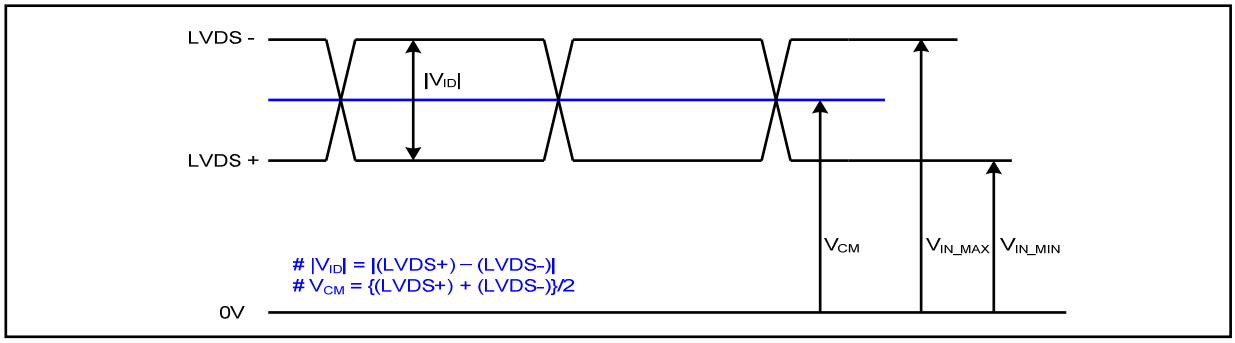

Description	Symbol	Min	Max	Unit	Notes
LVDS Differential Voltage	$\|V_{ID}\|$	100	600	mV	-
LVDS Common mode Voltage	V_{CM}	0.6	1.8	V	-
LVDS Input Voltage Range	V_{IN}	0.3	2.1	V	-

3-3-2. AC Specification

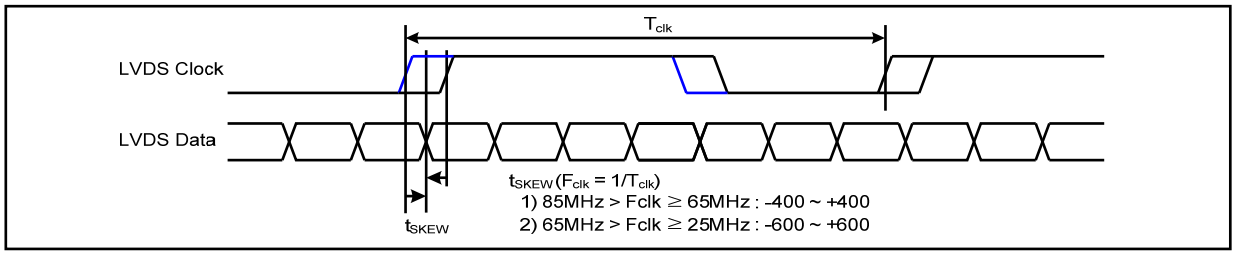

Description	Symbol	Min	Max	Unit	Notes
LVDS Clock to Data Skew Margin	t_{SKEW}	- 400	+ 400	ps	85MHz > Fclk ≥ 65MHz
	t_{SKEW}	- 600	+ 600	ps	65MHz > Fclk ≥ 25MHz
LVDS Clock to Clock Skew Margin (Even to Odd)	t_{SKEW_EO}	- 1/7	+ 1/7	T_{clk}	-
Maximum deviation of input clock frequency during SSC	F_{DEV}	-	± 3	%	-
Maximum modulation frequency of input clock during SSC	F_{MOD}	-	200	KHz	-

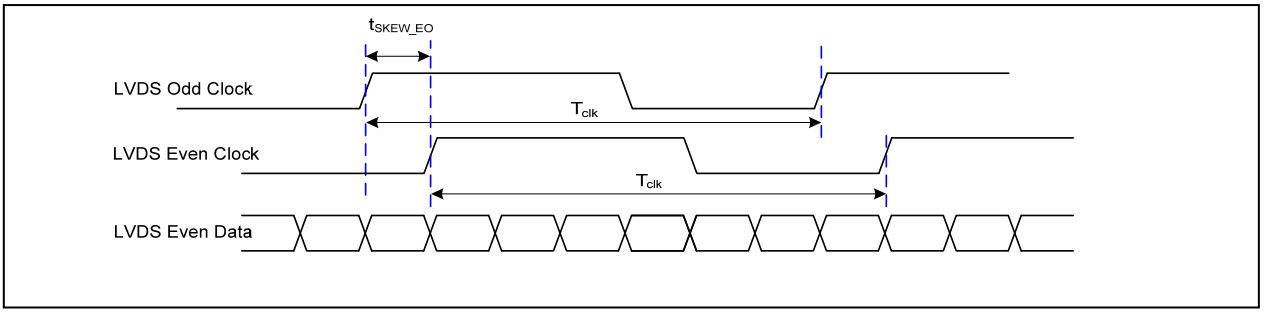

< Clock skew margin between channel >

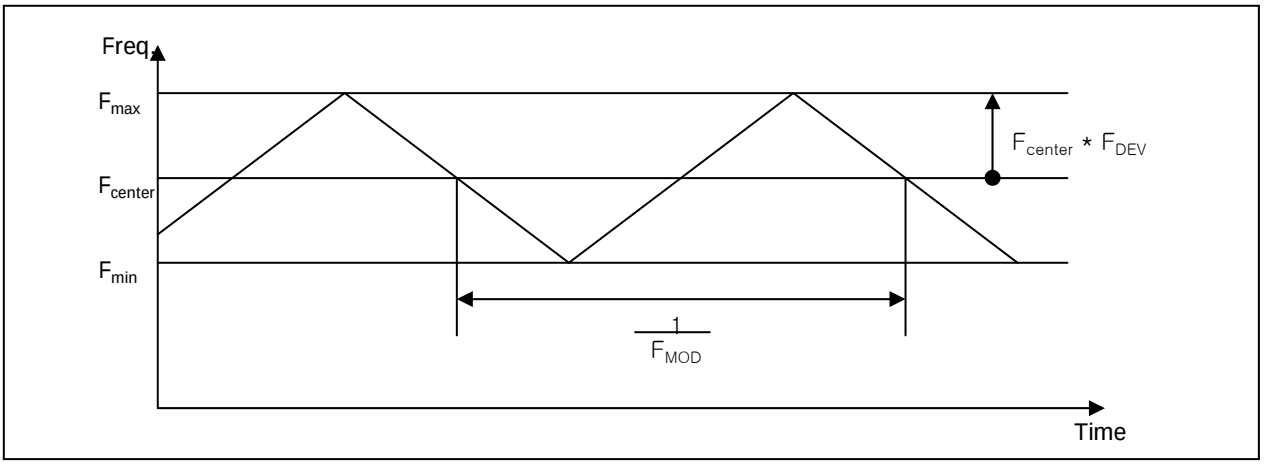

< Spread Spectrum >

3-3-3. Data Format

1) LVDS 1 Port

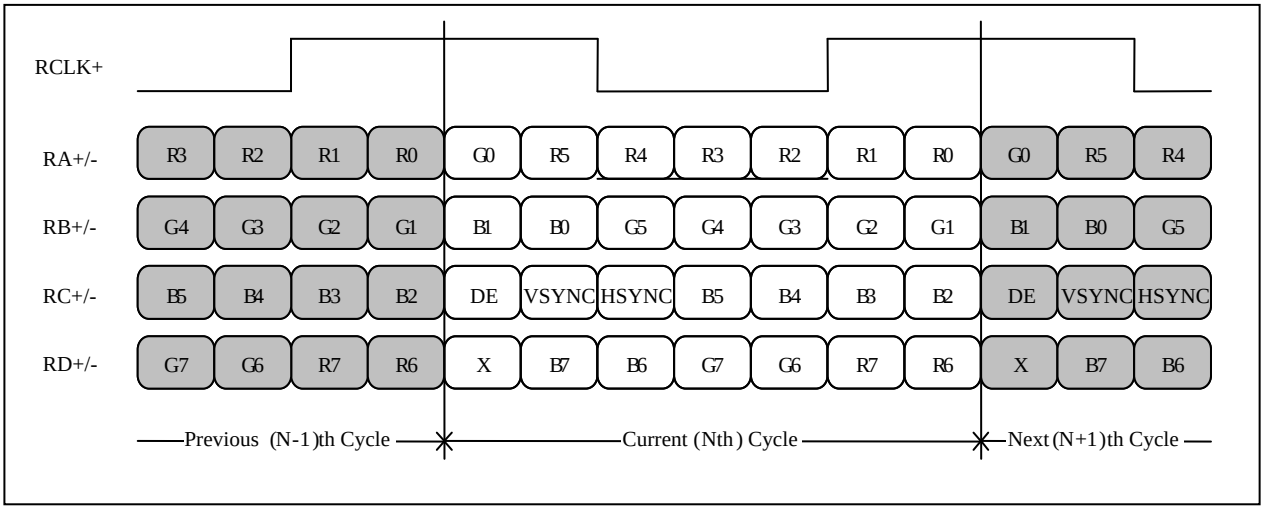

< LVDS Data Format >

3-4. Signal Timing Specifications

This is the signal timing required at the input of the User connector. All of the interface signal timing should be satisfied with the following specifications and specifications of LVDS Tx/Rx for its proper operation.

Table 4. TIMING TABLE

ITEM	Symbol		Min.	Typ.	Max.	Unit	Note
DCLK	Frequency	f_{CLK}	-	69.3	-	MHz	
Hsync	Period	t_{HP}	1446	1470	1518	tCLK	
	Width	t_{WH}	24	32	48		
	Width-Active	tw_{HA}	1366	1366	1366		
Vsync	Period	t_{VP}	780	786	792	tHP	
	Width	t_{WV}	2	3	5		
	Width-Active	tw_{VA}	768	768	768		
Data Enable	Horizontal back porch	t_{HBP}	32	40	56	tCLK	
	Horizontal front porch	t_{HFP}	24	32	48		
	Vertical back porch	t_{VBP}	7	10	12	tHP	
	Vertical front porch	t_{VFP}	3	5	7		

3-5. Signal Timing Waveforms

Condition : V_{CC} =3.3V

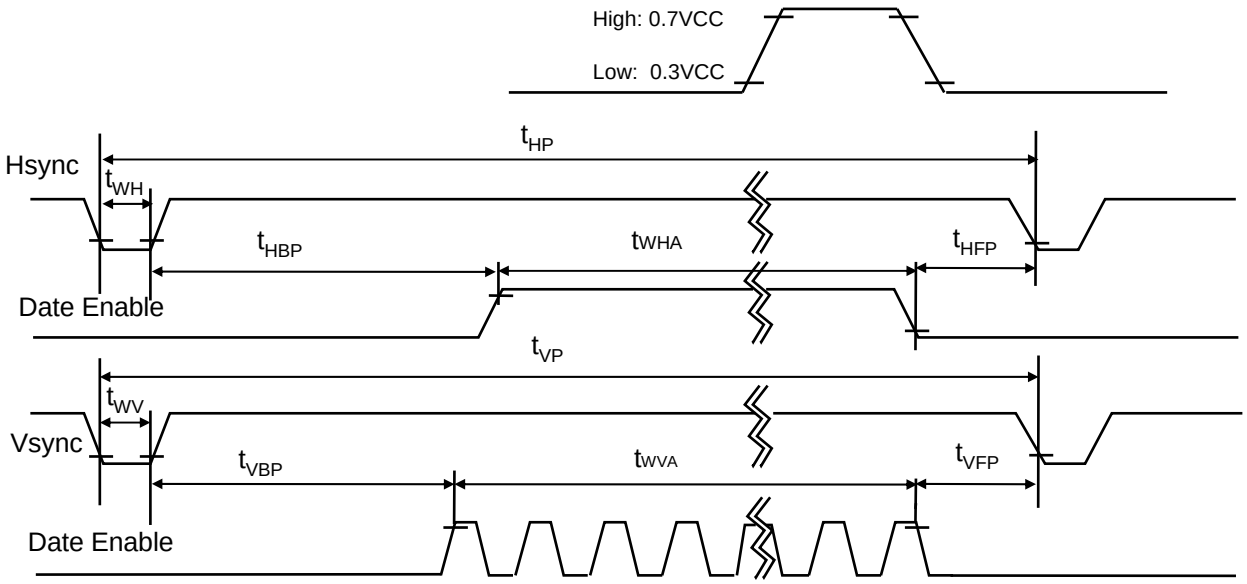

3-6. Color Input Data Reference

The brightness of each primary color (red,green and blue) is based on the 6-bit gray scale data input for the color ; the higher the binary input, the brighter the color. The table below provides a reference for color versus data input.

Table 5. COLOR DATA REFERENCE

Color		Input Color Data																	
		RED						GREEN						BLUE					
		MSB					LSB	MSB					LSB	MSB					LSB
		R 5	R 4	R 3	R 2	R 1	R 0	G 5	G 4	G 3	G 2	G 1	G 0	B 5	B 4	B 3	B 2	B 1	B 0
Basic Color	Black	0	0	0	0	0	0	0	0	0	0	0	0	0	0	0	0	0	0
	Red	1	1	1	1	1	1	0	0	0	0	0	0	0	0	0	0	0	0
	Green	0	0	0	0	0	0	1	1	1	1	1	1	0	0	0	0	0	0
	Blue	0	0	0	0	0	0	0	0	0	0	0	0	1	1	1	1	1	1
	Cyan	0	0	0	0	0	0	1	1	1	1	1	1	1	1	1	1	1	1
	Magenta	1	1	1	1	1	1	0	0	0	0	0	0	1	1	1	1	1	1
	Yellow	1	1	1	1	1	1	1	1	1	1	1	1	0	0	0	0	0	0
	White	1	1	1	1	1	1	1	1	1	1	1	1	1	1	1	1	1	1
RED	RED (00)	0	0	0	0	0	0	0	0	0	0	0	0	0	0	0	0	0	0
	RED (01)	0	0	0	0	0	1	0	0	0	0	0	0	0	0	0	0	0	0
	…	...						...						...					
	RED (62)	1	1	1	1	1	0	0	0	0	0	0	0	0	0	0	0	0	0
	RED (63)	1	1	1	1	1	1	0	0	0	0	0	0	0	0	0	0	0	0
GREEN	GREEN (00)	0	0	0	0	0	0	0	0	0	0	0	0	0	0	0	0	0	0
	GREEN (01)	0	0	0	0	0	0	0	0	0	0	0	1	0	0	0	0	0	0
	...	...						...						...					
	GREEN (62)	0	0	0	0	0	0	1	1	1	1	1	0	0	0	0	0	0	0
	GREEN (63)	0	0	0	0	0	0	1	1	1	1	1	1	0	0	0	0	0	0
BLUE	BLUE (00)	0	0	0	0	0	0	0	0	0	0	0	0	0	0	0	0	0	0
	BLUE (01)	0	0	0	0	0	0	0	0	0	0	0	0	0	0	0	0	0	1
	…	...						...						...					
	BLUE (62)	0	0	0	0	0	0	0	0	0	0	0	0	1	1	1	1	1	0
	BLUE (63)	0	0	0	0	0	0	0	0	0	0	0	0	1	1	1	1	1	1

3-7. Power Sequence

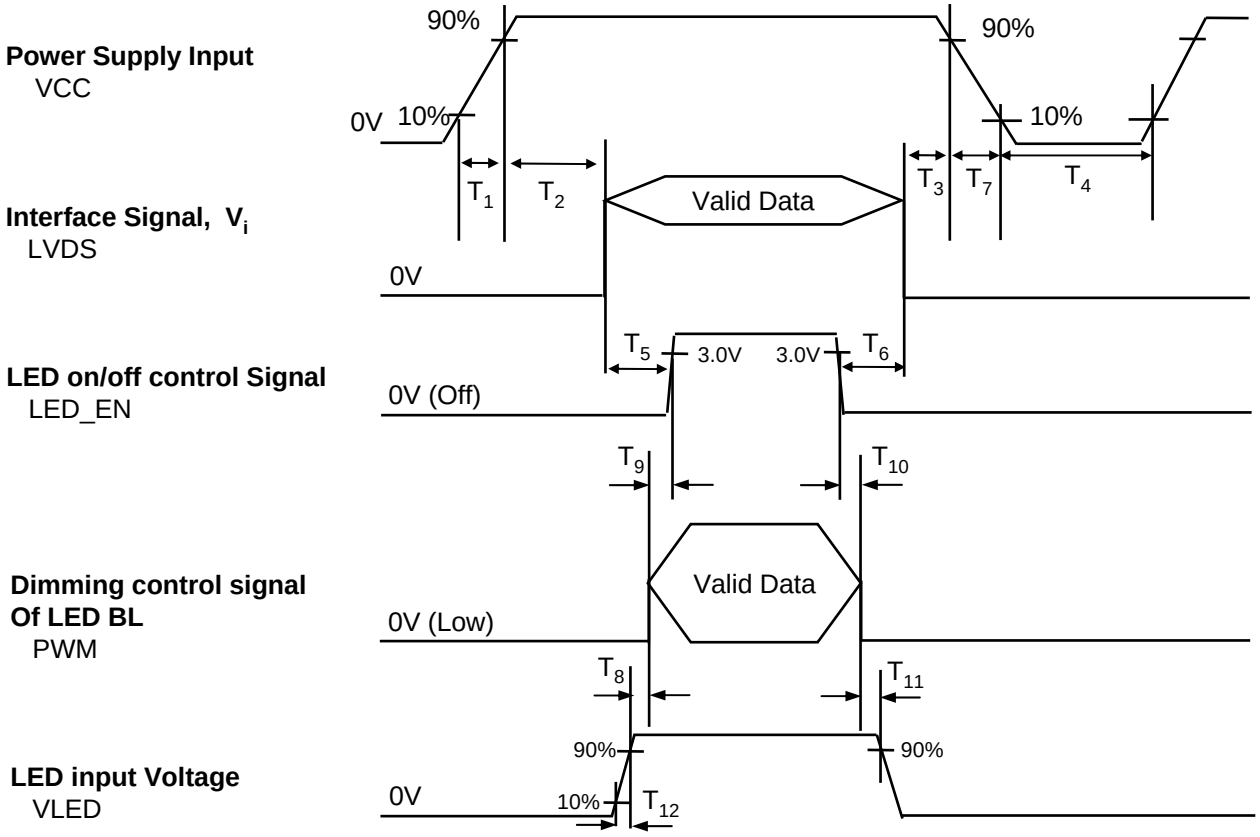

Table 6. POWER SEQUENCE TABLE

Logic Parameter	Value			Units	LED Parameter	Value			Units
	Min.	Typ.	Max.			Min.	Typ.	Max.	
T_1	0.5	-	10	ms	T_8	10	-	-	ms
T_2	0	-	50	ms	T_9	0	-	-	ms
T_3	0	-	50	ms	T_{10}	0	-	-	ms
T_4	400	-	-	ms	T_{11}	10	-	-	ms
T_5	200	-	-	ms	T_{12}	0.5	-	-	ms
T_6	200	-	-	ms					
T_7	3	-	10	ms					

Note)
1. Do not insert the mating cable when system turn on.
2. Valid Data have to meet "3-3. LVDS Signal Timing Specifications"
3. LVDS, LED_EN and PWM need to pull-down condition on invalid status.
4. LGD recommend the rising sequence of VLED after the Vcc and valid status of LVDS turn on.

4. Optical Specification

Optical characteristics are determined after the unit has been 'ON' and stable for approximately 20 minutes in a dark environment at 25°C. The values specified are at an approximate distance 50cm from the LCD surface at a viewing angle of Φ and Θ equal to 0°.
FIG. 1 presents additional information concerning the measurement equipment and method.

FIG. 1 Optical Characteristic Measurement Equipment and Method

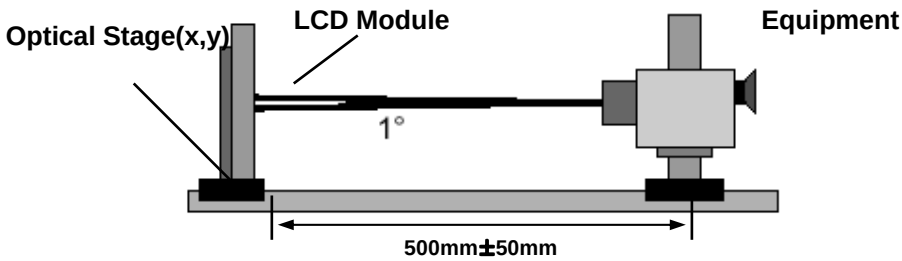

Table 7. OPTICAL CHARACTERISTICS

Ta=25°C, VCC=3.3V, fv=60Hz, f_{CLK}= 69.3MHz

Parameter		Symbol	Values			Units	Notes
			Min	Typ	Max		
Contrast Ratio		CR	300	500	-		1
Surface Luminance, white		L_{WH}	180	200	-	cd/m^2	2
Luminance Variation		δ_{WHITE}		1.4	1.6		3
Response Time		$Tr_R + Tr_D$	-	16	25	ms	4
Color Coordinates							
	RED	RX	0.547	0.577	0.607		
		RY	0.317	0.347	0.377		
	GREEN	GX	0.301	0.331	0.361		
		GY	0.519	0.549	0.579		
	BLUE	BX	0.129	0.159	0.189		
		BY	0.097	0.127	0.157		
	WHITE	WX	0.283	0.313	0.343		
		WY	0.299	0.329	0.359		
Viewing Angle							5
	x axis, right(Φ=0°)	Θr	40			degree	
	x axis, left (Φ=180°)	Θl	40			degree	
	y axis, up (Φ=90°)	Θu	10			degree	
	y axis, down (Φ=270°)	Θd	30			degree	
Gray Scale							6
				45			

Note)

1. Contrast Ratio(CR) is defined mathematically as

$$\text{Contrast Ratio} = \frac{\text{Surface Luminance with all white pixels}}{\text{Surface Luminance with all black pixels}}$$

2. Surface luminance is the average of 5 point across the LCD surface 50cm from the surface with all pixels displaying white. For more information see FIG 1.

$$L_{WH} = \text{Average}(L_1, L_2, \ldots L_5)$$

3. The variation in surface luminance , The panel total variation (δ_{WHITE}) is determined by measuring L_N at each test position 1 through 13 and then defined as followed numerical formula. For more information see FIG 2.

$$\delta_{WHITE} = \frac{\text{Maximum}(L_1, L_2, \ldots L_{13})}{\text{Minimum}(L_1, L_2, \ldots L_{13})}$$

4. Response time is the time required for the display to transition from white to black (rise time, Tr_R) and from black to white(Decay Time, Tr_D). For additional information see FIG 3.

5. Viewing angle is the angle at which the contrast ratio is greater than 10. The angles are determined for the horizontal or x axis and the vertical or y axis with respect to the z axis which is normal to the LCD surface. For more information see FIG 4.

6. Gray scale specification

* f_V = 60Hz

Gray Level	Luminance [%] (Typ)
L0	0.0
L7	0.8
L15	4.25
L23	10.9
L31	21.0
L39	34.8
L47	52.5
L55	74.2
L63	100

FIG. 2 Luminance

<Measuring point for Average Luminance & measuring point for Luminance variation>

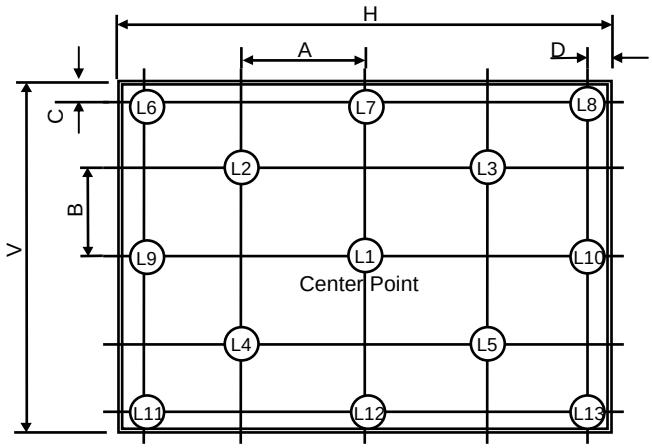

H,V : ACTIVE AREA
A : H/4 mm
B : V/4 mm
C : 10 mm
D : 10 mm
POINTS : 13 POINTS

FIG. 3 Response Time

The response time is defined as the following figure and shall be measured by switching the input signal for “black” and “white”.

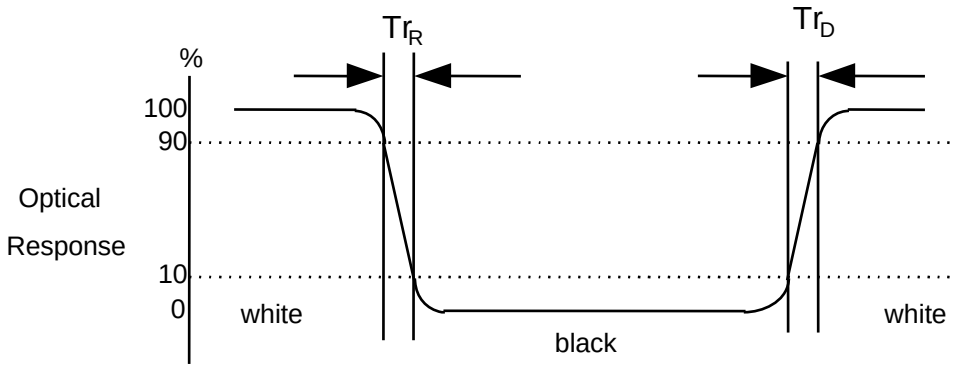

FIG. 4 Viewing angle

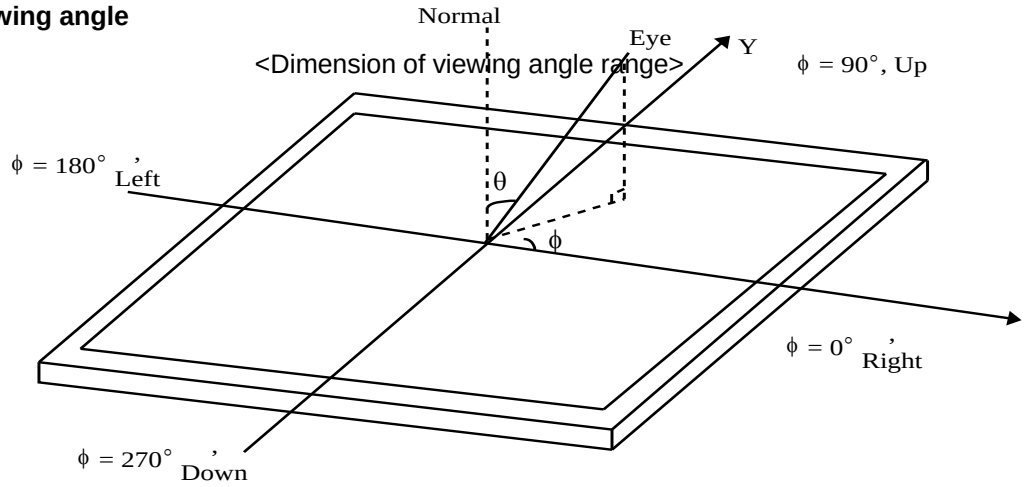

5. Mechanical Characteristics

The contents provide general mechanical characteristics for the model LP133WH2.
In addition the figures in the next page are detailed mechanical drawing of the LCD.

Outline Dimension	Horizontal	306.3 ± 0.50mm
	Vertical	177.7 ± 0.50mm
	Depth	3.6mm(Max.)
Bezel Area	Horizontal	296.62 mm
	Vertical	168.17 mm
Active Display Area	Horizontal	293.42mm
	Vertical	164.97 mm
Weight	300g(Max.)	
Surface Treatment	Hard Coating(3H) Glare treatment of the front Polarizer (Haze 0%)	

<FRONT VIEW>

Note) Unit:[mm], General tolerance: ± 0.5mm

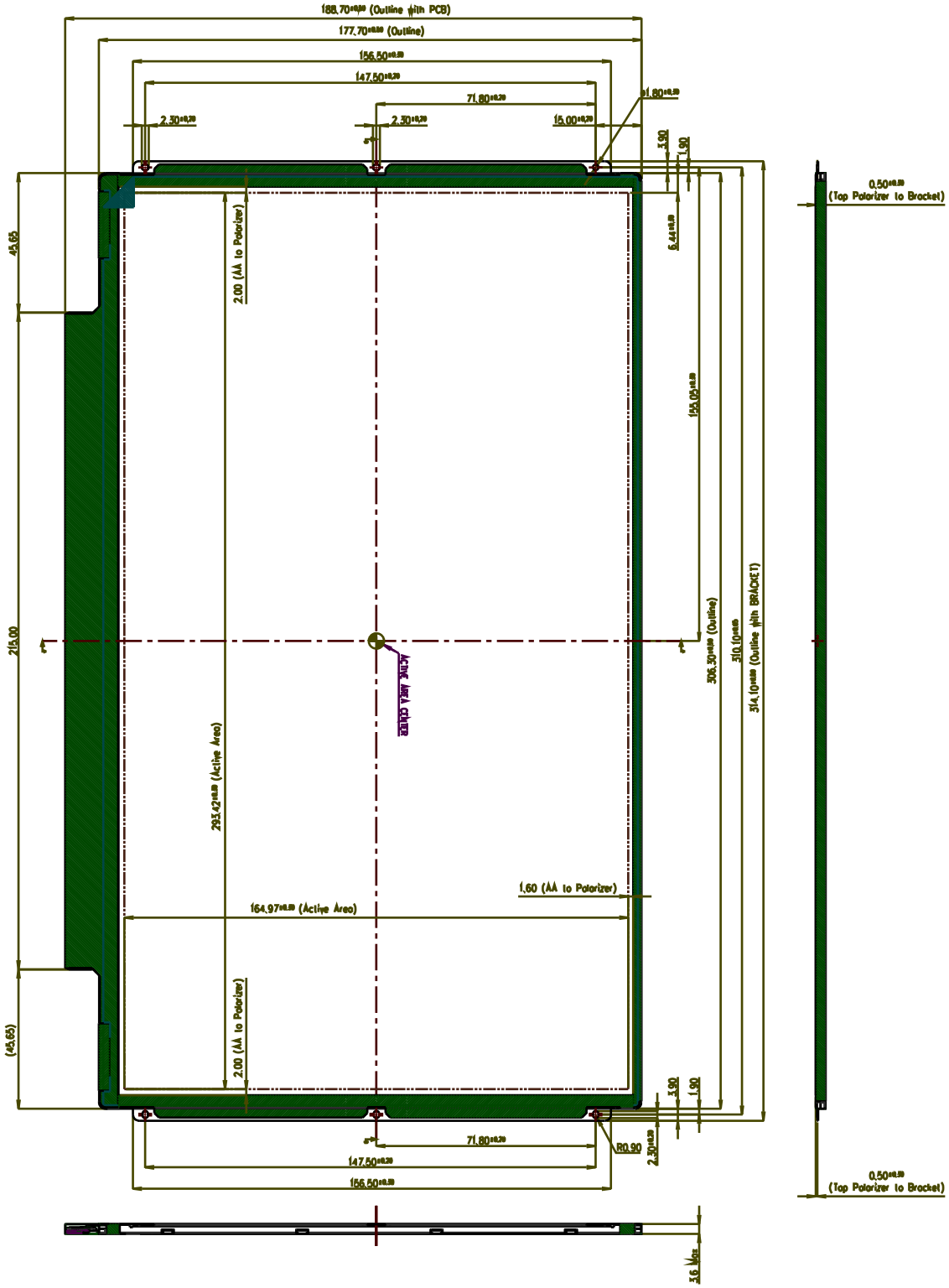

<REAR VIEW>

Note) Unit:[mm], General tolerance: ± 0.5mm

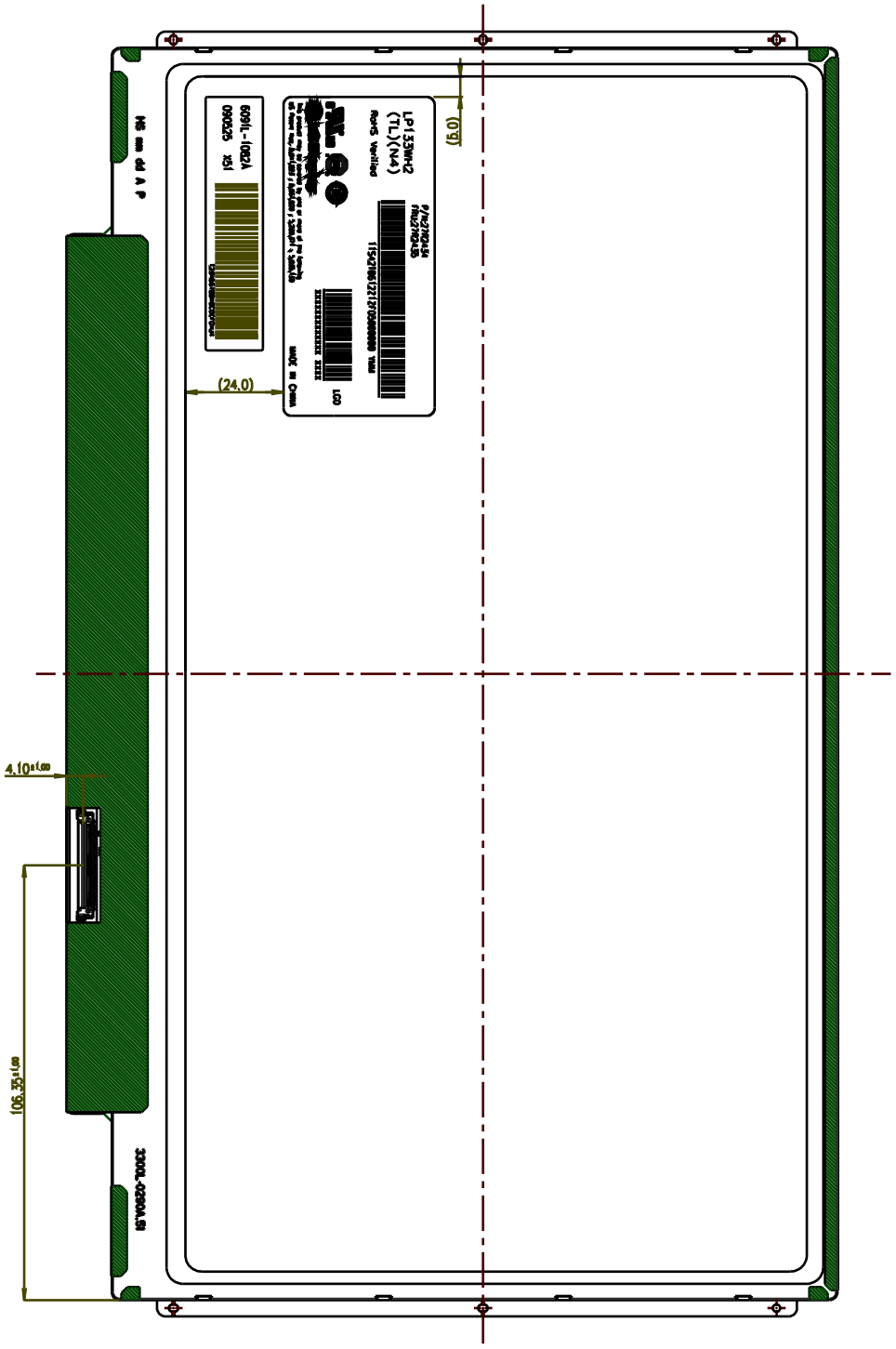

6. Reliability

Environment test condition

No.	Test Item	Conditions
1	High temperature storage test	Ta= 60°C, 240h
2	Low temperature storage test	Ta= -20°C, 240h
3	High temperature operation test	Ta= 50°C, 50%RH, 240h
4	Low temperature operation test	Ta= 0°C, 240h
5	Vibration test (non-operating)	Sine wave, 5 ~ 150Hz, 1.5G, 0.37oct/min 3 axis, 30min/axis
6	Shock test (non-operating)	- No functional or cosmetic defects following a shock to all 6 sides delivering at least 180 G in a half sine pulse no longer than 2 ms to the display module - No functional defects following a shock delivering at least 200 g in a half sine pulse no longer than 2 ms to each of 6 sides. Each of the 6 sides will be shock tested with one each display, for a total of 6 displays
7	Altitude operating storage / shipment	0 ~ 10,000 feet (3,048m) 24Hr 0 ~ 40,000 feet (12,192m) 24Hr

{ Result Evaluation Criteria }

There should be no change which might affect the practical display function when the display quality test is conducted under normal operating condition.

7. International Standards

7-1. Safety

a) UL 60950-1:2003, First Edition, Underwriters Laboratories, Inc.,
Standard for Safety of Information Technology Equipment.
b) CAN/CSA C22.2, No. 60950-1-03 1st Ed. April 1, 2003, Canadian Standards Association,
Standard for Safety of Information Technology Equipment.
c) EN 60950-1:2001, First Edition,
European Committee for Electrotechnical Standardization(CENELEC)
European Standard for Safety of Information Technology Equipment.

7-2. EMC

a) ANSI C63.4 “Methods of Measurement of Radio-Noise Emissions from Low-Voltage Electrical and Electrical Equipment in the Range of 9kHZ to 40GHz. “American National Standards Institute(ANSI), 1992
b) C.I.S.P.R “Limits and Methods of Measurement of Radio Interface Characteristics of Information Technology Equipment.“ International Special Committee on Radio Interference.
c) EN 55022 “Limits and Methods of Measurement of Radio Interface Characteristics of Information Technology Equipment.“ European Committee for Electrotechnical Standardization.(CENELEC), 1998
(Including A1: 2000)

8. Packing

8-1. Designation of Lot Mark

a) Lot Mark

A	B	C	D	E	F	G	H	I	J	K	L	M

A,B,C : SIZE(INCH)
E : MONTH
D : YEAR
F ~ M : SERIAL NO.

Note

1. YEAR

Year	2001	2002	2003	2004	2005	2006	2007	2008	2009	2010
Mark	1	2	3	4	5	6	7	8	9	0

2. MONTH

Month	Jan	Feb	Mar	Apr	May	Jun	Jul	Aug	Sep	Oct	Nov	Dec
Mark	1	2	3	4	5	6	7	8	9	A	B	C

b) Location of Lot Mark

Serial No. is printed on the label. The label is attached to the backside of the LCD module.
This is subject to change without prior notice.

8-2. Packing Form

a) Package quantity in one box : 20 pcs

b) Box Size : 422X340X260

9. PRECAUTIONS

Please pay attention to the followings when you use this TFT LCD module.

9-1. MOUNTING PRECAUTIONS

(1) You must mount a module using holes arranged in four corners or four sides.
(2) You should consider the mounting structure so that uneven force (ex. Twisted stress) is not applied to the module. And the case on which a module is mounted should have sufficient strength so that external force is not transmitted directly to the module.
(3) Please attach the surface transparent protective plate to the surface in order to protect the polarizer. Transparent protective plate should have sufficient strength in order to the resist external force.
(4) You should adopt radiation structure to satisfy the temperature specification.
(5) Acetic acid type and chlorine type materials for the cover case are not desirable because the former generates corrosive gas of attacking the polarizer at high temperature and the latter causes circuit break by electro-chemical reaction.
(6) Do not touch, push or rub the exposed polarizers with glass, tweezers or anything harder than HB pencil lead. And please do not rub with dust clothes with chemical treatment.
Do not touch the surface of polarizer for bare hand or greasy cloth.(Some cosmetics are detrimental to the polarizer.)
(7) When the surface becomes dusty, please wipe gently with absorbent cotton or other soft materials like chamois soaks with petroleum benzene. Normal-hexane is recommended for cleaning the adhesives used to attach front / rear polarizers. Do not use acetone, toluene and alcohol because they cause chemical damage to the polarizer.
(8) Wipe off saliva or water drops as soon as possible. Their long time contact with polarizer causes deformations and color fading.
(9) Do not open the case because inside circuits do not have sufficient strength.

9-2. OPERATING PRECAUTIONS

(1) The spike noise causes the mis-operation of circuits. It should be lower than following voltage :
V=± 200mV(Over and under shoot voltage)

(2) Response time depends on the temperature.(In lower temperature, it becomes longer.)
(3) Brightness depends on the temperature. (In lower temperature, it becomes lower.)
And in lower temperature, response time(required time that brightness is stable after turned on) becomes longer.
(4) Be careful for condensation at sudden temperature change. Condensation makes damage to polarizer or electrical contacted parts. And after fading condensation, smear or spot will occur.
(5) When fixed patterns are displayed for a long time, remnant image is likely to occur.
(6) Module has high frequency circuits. Sufficient suppression to the electromagnetic interference shall be done by system manufacturers. Grounding and shielding methods may be important to minimized the interference.

9-3. ELECTROSTATIC DISCHARGE CONTROL

Since a module is composed of electronic circuits, it is not strong to electrostatic discharge. Make certain that treatment persons are connected to ground through wrist band etc. And don't touch interface pin directly.

9-4. PRECAUTIONS FOR STRONG LIGHT EXPOSURE

Strong light exposure causes degradation of polarizer and color filter.

9-5. STORAGE

When storing modules as spares for a long time, the following precautions are necessary.

(1) Store them in a dark place. Do not expose the module to sunlight or fluorescent light. Keep the temperature between 5°C and 35°C at normal humidity.
(2) The polarizer surface should not come in contact with any other object.
It is recommended that they be stored in the container in which they were shipped.

9-6. HANDLING PRECAUTIONS FOR PROTECTION FILM

(1) When the protection film is peeled off, static electricity is generated between the film and polarizer. This should be peeled off slowly and carefully by people who are electrically grounded and with well ion-blown equipment or in such a condition, etc.
(2) The protection film is attached to the polarizer with a small amount of glue. If some stress is applied to rub the protection film against the polarizer during the time you peel off the film, the glue is apt to remain on the polarizer.
Please carefully peel off the protection film without rubbing it against the polarizer.
(3) When the module with protection film attached is stored for a long time, sometimes there remains a very small amount of glue still on the polarizer after the protection film is peeled off.
(4) You can remove the glue easily. When the glue remains on the polarizer surface or its vestige is recognized, please wipe them off with absorbent cotton waste or other soft material like chamois soaked with normal-hexane.

APPENDIX A. Enhanced Extended Display Identification Data (EEDID™) 1/3

Byte# (decimal)	Byte# (HEX)	Field Name and Comments	Data (DEC)	Data (HEX)	Input Value	Note
0	00	Header	0	00		
1	01	Header	255	FF		
2	02	Header	255	FF		
3	03	Header	255	FF		
4	04	Header	255	FF		
5	05	Header	255	FF		
6	06	Header	255	FF		
7	07	Header	0	00		
8	08	ID system Manufacturer Name	48	30	LEN	
9	09	Compressed ASCII	174	AE		
10	0A	ID Product Code (LSB)	144	90	13"W 16:9 HD 1366x768 LED B/L	
11	0B	ID Product Code (MSB)	64	40		
12	0C	LCD Module Serial No.	0	00	# 0	
13	0D	LCD Module Serial No.	0	00		
14	0E	LCD Module Serial No.	0	00		
15	0F	LCD Module Serial No.	0	00		
16	10	Week of Manufacture	0	00	0 weeks	
17	11	Year of Manufacture	19	13	2009 years	
18	12	EDID Structure version	1	01	Ver. 1.3	
19	13	EDID Revision	3	03		
20	14	Video Input Definition	128	80	Digital	
21	15	Max H image size(cm)	29	1D	29cm	
22	16	Max V image size(cm)	16	10	16cm	
23	17	Display gamma	120	78	2.20	
24	18	Feature support(DPMS)	234	EA	Standby , Suspend , Active Off/Very Low Power , RGB color display , Preferred Timing Mode	
25	19	Red/Green low Bits	254	FE		
26	1A	Blue/White Low Bits	229	E5		
27	1B	Red X	147	93	0.577	
28	1C	Red Y	88	58	0.347	
29	1D	Green X	84	54	0.331	
30	1E	Green Y	140	8C	0.549	
31	1F	Blue X	40	28	0.159	
32	20	Blue Y	32	20	0.127	
33	21	White X	80	50	0.313	
34	22	White Y	84	54	0.329	
35	23	Established Timing I	0	00		
36	24	Established Timing II	0	00		
37	25	Manufacturer's Timings	0	00		
38	26	Standard Timing Identification 1	1	01		
39	27	Standard Timing Identification 1	1	01		
40	28	Standard Timing Identification 2	1	01		
41	29	Standard Timing Identification 2	1	01		
42	2A	Standard Timing Identification 3	1	01		
43	2B	Standard Timing Identification 3	1	01		
44	2C	Standard Timing Identification 4	1	01		
45	2D	Standard Timing Identification 4	1	01		
46	2E	Standard Timing Identification 5	1	01		
47	2F	Standard Timing Identification 5	1	01		
48	30	Standard Timing Identification 6	1	01		
49	31	Standard Timing Identification 6	1	01		
50	32	Standard Timing Identification 7	1	01		
51	33	Standard Timing Identification 7	1	01		
52	34	Standard Timing Identification 8	1	01		
53	35	Standard Timing Identification 8	1	01		

APPENDIX A. Enhanced Extended Display Identification Data (EEDID™) 2/3

Byte# (decimal)	Byte# (HEX)	Field Name and Comments	Data (DEC)	Data (HEX)	Input Value	Note
54	36	Pixel Clock/10,000 (LSB)	18	12	69.3MHz (Refresh rate 59.98 Hz)	
55	37	Pixel Clock/10,000 (MSB) /	27	1B		
56	38	Horizontal Active	86	56	1366 pixels	
57	39	Horizontal Blanking	104	68	104 pixels	
58	3A	Horizontal Active : Horizontal Blanking	80	50		
59	3B	Vertical Avtive	0	00	768 lines	
60	3C	Vertical Blanking	18	12	18 lines	
61	3D	Vertical Active : Vertical Blanking	48	30		
62	3E	Horizontal Sync. Offset	32	20	32 pixels	
63	3F	Horizontal Sync Pulse Width	32	20	32 pixels	
64	40	Vertical Sync Offset : Sync Width	53	35	3 lines / 5 lines	
65	41	Horizontal Vertical Sync Offset/Width upper 2bit	0	00		
66	42	Horizontal Image Size	37	25	293 mm	
67	43	Vertical Image Size	165	A5	165 mm	
68	44	Horizontal & Vertical Image Size (upper 4bit)	16	10		
69	45	Horizontal Border = 0	0	00	0 pixels	
70	46	Vertical Border = 0	0	00	0 lines	
71	47	Non-interlaced,Normal display,no stereo,Digital separate sync,H/V pol negatives	25	19	Non-interlaced , Normal display, no stereo , Digital separate , Vertical Polarity Negative , Horizontal Polarity Negative	
72	48	Pixel Clock/10,000 (LSB) 50Hz	148	94	57.8MHz (Refresh rate 50.03 Hz)	
73	49	Pixel Clock/10,000 (MSB) / 50Hz	22	16		
74	4A	Horizontal Active	86	56	1366 pixels	
75	4B	Horizontal Blanking	104	68	104 pixels	
76	4C	Horizontal Active : Horizontal Blanking	80	50		
77	4D	Vertical Avtive	0	00	768 lines	
78	4E	Vertical Blanking	18	12	18 lines	
79	4F	Vertical Active : Vertical Blanking	48	30		
80	50	Horizontal Sync. Offset	32	20	32 pixels	
81	51	Horizontal Sync Pulse Width	32	20	32 pixels	
82	52	Vertical Sync Offset : Sync Width	53	35	3 lines / 5 lines	
83	53	Horizontal Vertical Sync Offset/Width upper 2bit	0	00		
84	54	Horizontal Image Size	37	25	293 mm	
85	55	Vertical Image Size	165	A5	165 mm	
86	56	Horizontal & Vertical Image Size (upper 4bit)	16	10		
87	57	Horizontal Border = 0	0	00	0 pixels	
88	58	Vertical Border = 0	0	00	0 lines	
89	59	Non-interlaced,Normal display,no stereo,Digital separate sync,H/V pol negatives	25	19	Non-interlaced , Normal display, no stereo , Digital separate , Vertical Polarity Negative , Horizontal Polarity Negative	
90	5A	Detailed Timing Descriptor #3	0	00		
91	5B		0	00		
92	5C		0	00		
93	5D		15	0F	ASCII String	
94	5E		0	00		
95	5F	(Horizontal active pixel /8)-31	140	8C	1368 pixel	
96	60	Image Aspect Ratio(15:9)	9	09	16 : 9	
97	61	Low Refresh Rate #1(50Hz)	50	32	50 Hz	
98	62	(Horizontal active pixel /8)-31	140	8C	1368 pixel	
99	63	Image Aspect Ratio(16:10)	9	09	16 : 9	
100	64	Low Refresh Rate #2(40Hz)	40	28	40 Hz	
101	65	Brightness(1/10nit)	20	14	200 nit	
102	66	Feature flag(TN mode)	9	09	Sync. Inputs SupportedSync. Inputs Supported	
103	67	Reserved 00h	0	00		
104	68	EISA manufacturer code(3 Character ID)	50	32	LPL	
105	69	Compressed ASCII	12	0C		
106	6A	Panel Supplier Reserved - Product code	0	00	Not yet fixed	
107	6B	(Hex, LSB first)	0	00		

APPENDIX A. Enhanced Extended Display Identification Data (EEDID™) 3/3

Byte# (decimal)	Byte# (HEX)	Field Name and Comments	Data (DEC)	Data (HEX)	Input Value	Note
108	6C	Detailed Timing Descriptor #4	0	00		
109	6D		0	00		
110	6E		0	00		
111	6F		254	FE	ASCII String	
112	70		0	00		
113	71	(Supplier S/N)	76	4C	[L]	
114	72	(Supplier S/N)	80	50	[P]	
115	73	(Supplier S/N)	49	31	[1]	
116	74	(Supplier S/N)	51	33	[3]	
117	75	(Supplier S/N)	51	33	[3]	
118	76	(Supplier S/N)	87	57	[W]	
119	77	(Supplier S/N)	72	48	[H]	
120	78	(Supplier S/N)	50	32	[2]	
121	79	(Supplier S/N)	45	2D	[-]	
122	7A	(Supplier S/N)	84	54	[T]	
123	7B	(Supplier S/N)	76	4C	[L]	
124	7C	(Supplier S/N)	78	4E	[N]	
125	7D	(Supplier S/N)	52	34	[4]	
126	7E	Extension flag = 00	0	00		
127	7F	Checksum	2	02		