SPECIFICATION
FOR
APPROVAL

(●) **Preliminary Specification**
( ) **Final Specification**

Title	13.3” HD TFT LCD

BUYER	
MODEL	-

SUPPLIER	LG Display Co., Ltd.
*MODEL	LP133WH2
Suffix	TLGA

*When you obtain standard approval,
please use the above model name without suffix

APPROVED BY	SIGNATURE
/	
/	
/	

Please return 1 copy for your confirmation with your signature and comments.

APPROVED BY	SIGNATURE
S. R. Kim / S.Manager	
REVIEWED BY	
M. J. Lee / S.Manager	
PREPARED BY	
J. P. Lee / Engineer **J. M. Shin / Engineer**	

Product Engineering Dept.
LG Display Co., Ltd

Contents

No	ITEM	Page
	COVER	1
	CONTENTS	2
	RECORD OF REVISIONS	3
1	GENERAL DESCRIPTION	4
2	ABSOLUTE MAXIMUM RATINGS	5
3	ELECTRICAL SPECIFICATIONS	
3-1	ELECTRICAL CHARACTREISTICS	6-7
3-2	INTERFACE CONNECTIONS	8
3-3	LVDS SIGNAL TIMING SPECIFICATION	9-10
3-4	SIGNAL TIMING SPECIFICATIONS	11
3-5	SIGNAL TIMING WAVEFORMS	11
3-6	COLOR INPUT DATA REFERNECE	12
3-7	POWER SEQUENCE	13
4	OPTICAL SFECIFICATIONS	14-16
5	MECHANICAL CHARACTERISTICS	17-19
6	RELIABLITY	24
7	INTERNATIONAL STANDARDS	
7-1	SAFETY	25
8	PACKING	
8-1	DESIGNATION OF LOT MARK	26
8-2	PACKING FORM	26
9	PRECAUTIONS	27-28
A	APPENDIX. Enhanced Extended Display Identification Data	29-31

RECORD OF REVISIONS

Revision No	Revision Date	Page	Description	EDID ver
0.0	Aug. 09. 2011	-	First Draft (Preliminary Specification)	0.0
0.1	Nov. 02. 2011	6	Update Electrical Characteristics	0.1
		20	Update Detail Information of PPID label and Revision Code	-
		29-31	Update E-EDID Table (Checksum : 31)	-

1. General Description

The LP133WH2 is a Color Active Matrix Liquid Crystal Display with an integral LED backlight system. The matrix employs a-Si Thin Film Transistor as the active element. It is a transmissive type display operating in the normally white mode. This TFT-LCD has 13.3 inches diagonally measured active display area with HD resolution (1366 horizontal by 768 vertical pixel array). Each pixel is divided into Red, Green and Blue sub-pixels or dots which are arranged in vertical stripes. Gray scale or the brightness of the sub-pixel color is determined with a 6-bit gray scale signal for each dot, thus, presenting a palette of more than 262,144 colors. The LP133WH2 has been designed to apply the interface method that enables low power, high speed, low EMI. The LP133WH2 is intended to support applications where thin thickness, low power are critical factors and graphic displays are important. In combination with the vertical arrangement of the sub-pixels, the LP133WH2 characteristics provide an excellent flat display for office automation products such as Notebook PC.

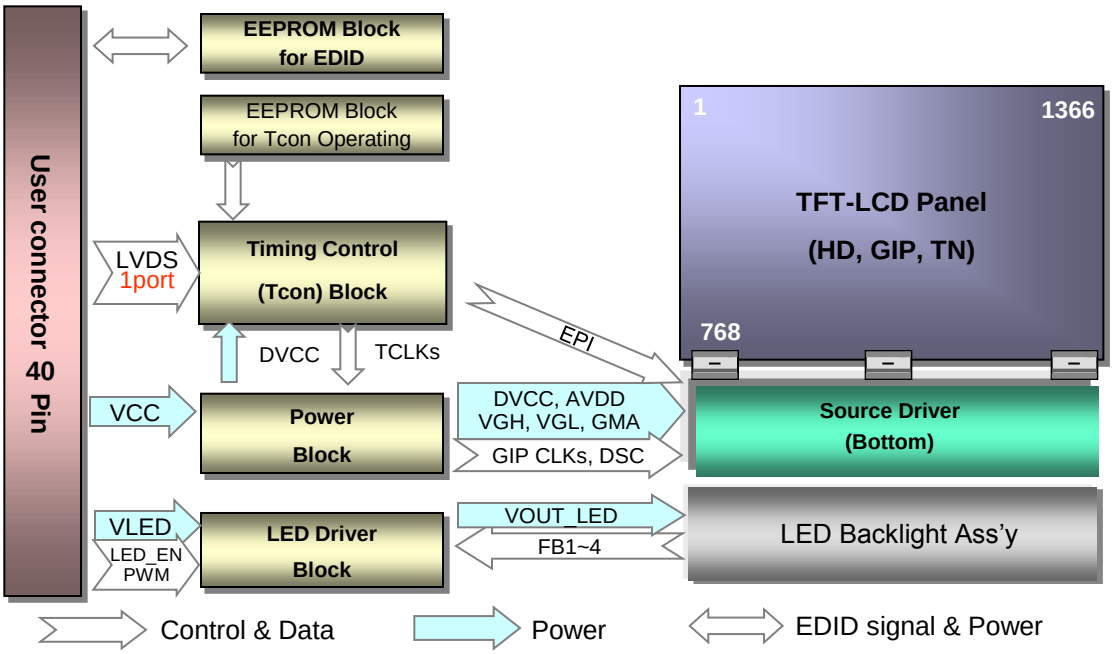

General Features

Active Screen Size	13.3 inches diagonal
Outline Dimension	306.3(Typ. H) × 177.7(Typ. V) × 3.6(D, Max.) mm
Pixel Pitch	0.2148 × 0.2148 mm
Pixel Format	1366 horiz. by 768 vert. Pixels RGB strip arrangement
Color Depth	6-bit, 262,144 colors
Luminance, White	200 cd/m^2(5P Typ.)
Power Consumption	Total 3.0W(Max.) Logic : 0.8 W (Max.@ RGB), B/L : 2.2 W (Max.@ VLED 12V)
Weight	300 g (Max.)
Display Operating Mode	Transmissive mode, Normally white
Surface Treatment	Glare treatment of the front polarizer
RoHS Compliance	Yes
BFR / PVC / As Free	Yes for all.

2. Absolute Maximum Ratings

The following are maximum values which, if exceeded, may cause faulty operation or damage to the unit.

Table 1. ABSOLUTE MAXIMUM RATINGS

Parameter	Symbol	Values		Units	Notes
		Min	Max		
Power Input Voltage	VCC	-0.3	4.0	Vdc	at 25 ± 5°C
Operating Temperature	TOP	0	50	°C	1
Storage Temperature	HST	-20	60	°C	1
Operating Ambient Humidity	HOP	10	90	%RH	1
Storage Humidity	HST	10	90	%RH	1

Note : 1. Temperature and relative humidity range are shown in the figure below.
Wet bulb temperature should be 39°C Max, and no condensation of water.

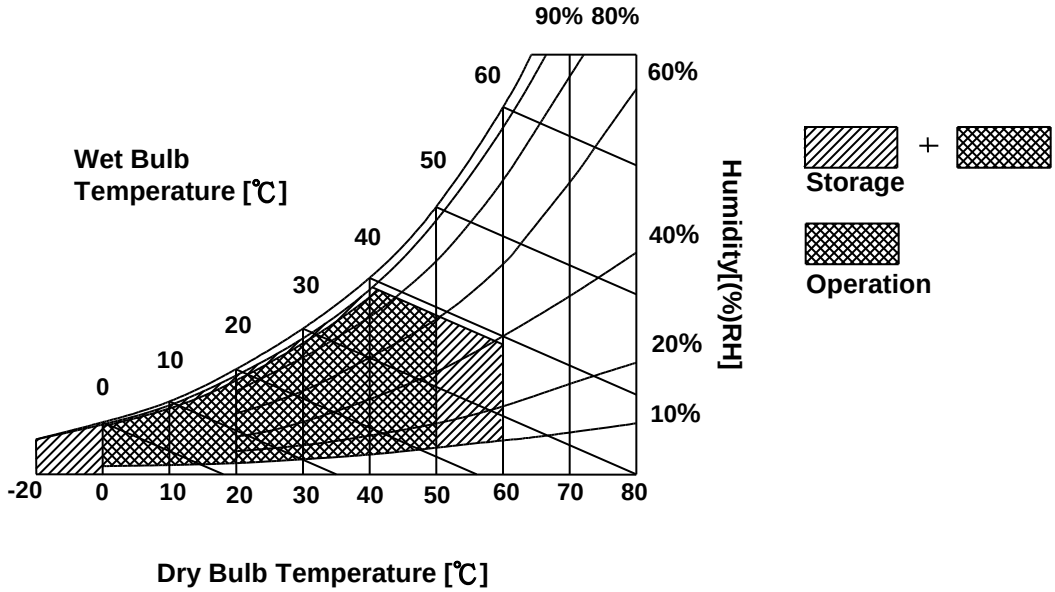

3. Electrical Specifications

3-1. Electrical Characteristics

The LP133WH2 requires two power inputs. The first logic is employed to power the LCD electronics and to drive the TFT array and liquid crystal. The second backlight is the input about LED BL with LED Driver.

Table 2. ELECTRICAL CHARACTERISTICS

Parameter		Symbol	Values			Unit	Notes
			Min	Typ	Max		
LOGIC :							
Power Supply Input Voltage		V_{CC}	3.0	3.3	3.6	V	1
Power Supply Input Current	RGB	I_{CC}	-	220	255	mA	2
Power Consumption		P_{CC}	-	0.7	0.8	W	2
Power Supply Inrush Current		I_{CC_P}	-	-	1500	mA	3
LVDS Impedance		Z_{LVDS}	90	100	110	Ω	4
BACKLIGHT : (with LED Driver)							
LED Power Input Voltage		V_{LED}	7.0	12.0	21.0	V	5
LED Power Input Current		I_{LED}	-	-	190	mA	6
LED Power Consumption		P_{LED}		-	2.2	W	
LED Power Inrush Current		I_{LED_P}	-	-	1500	mA	7
PWM Duty Ratio			5	-	100	%	8
PWM Jitter		-	0	-	0.2	%	9
PWM Impedance		Z_{PWM}	20	40	60	kΩ	
PWM Frequency		F_{PWM}	200	-	1000	Hz	10
PWM High Level Voltage		V_{PWM_H}	3.0	-	5.3	V	
PWM Low Level Voltage		V_{PWM_L}	0	-	0.3	V	
LED_EN Impedance		Z_{PWM}	20	40	60	kΩ	
LED_EN High Voltage		$V_{LED_EN_H}$	3.0	-	5.3	V	
LED_EN Low Voltage		$V_{LED_EN_L}$	0	-	0.3	V	
DBC_EN High Voltage			3.0	-	5.3	V	
DBC_EN Low Voltage			0	-	0.3	V	
Life Time			15,000	-	-	Hrs	12

Note)

1. The measuring position is the connector of LCM and the test conditions are under 25℃, fv = 60Hz, Black pattern.
2. The specified Icc current and power consumption are under the Vcc = 3.3V , 25℃, fv = 60Hz condition and Mosaic pattern.

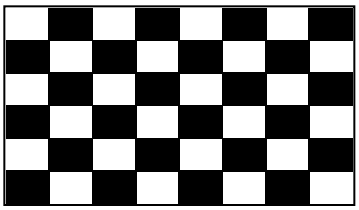

3. This Spec. is the max load condition for the cable impedance designing.
4. The below figures are the measuring Vcc condition and the Vcc control block LGD used. The Vcc condition is same as the minimum of T1 at Power on sequence.

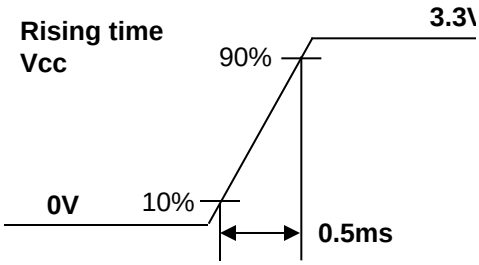

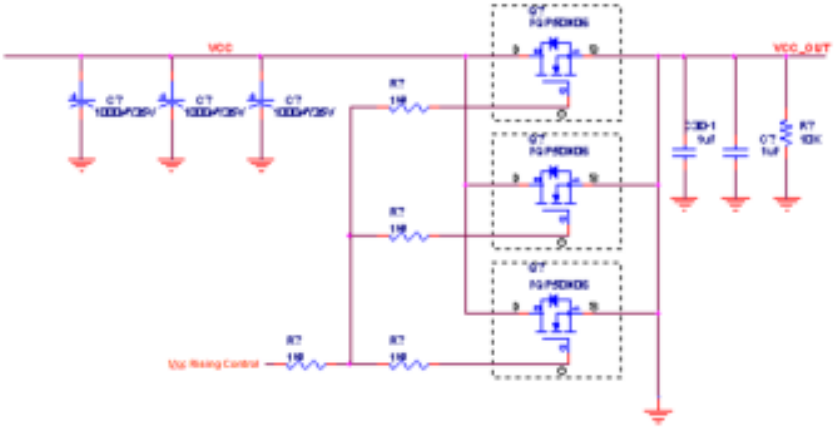

5. This impedance value is needed for proper display and measured form LVDS Tx to the mating connector.
6. The measuring position is the connector of LCM and the test conditions are under 25℃.
7. The current and power consumption with LED Driver are under the Vled = 12.0V , 25℃, Dimming of Max luminance and White pattern with the normal frame frequency operated(60Hz).
8. The below figures are the measuring Vled condition and the Vled control block LGD used. VLED control block is same with Vcc control block.

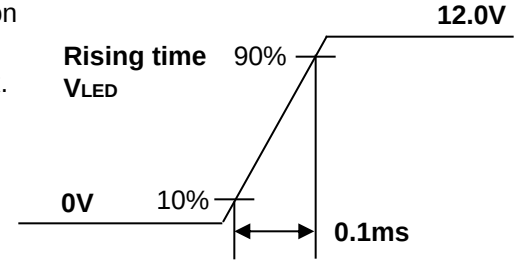

9. The operation of LED Driver below minimum dimming ratio may cause flickering or reliability issue.
10. If Jitter of PWM is bigger than maximum, it may induce flickering.
11. This Spec. is not effective at 100% dimming ratio as an exception because it has DC level equivalent to 0Hz. In spite of acceptable range as defined, the PWM Frequency should be fixed and stable for more consistent brightness control at any specific level desired.
12. The life time is determined as the time at which brightness of LCD is 50% compare to that of minimum value specified in table 7. under general user condition.

3-2. Interface Connections

This LCD employs two interface connections, a 40 pin connector used for the module electronics interface and the other connector used for the integral backlight system.

Table 3. MODULE CONNECTOR PIN CONFIGURATION (CN1)

Pin	Symbol	Description	Notes
1	Test Loop	Dell's Test loop to 34pin	**[Interface Chip]** 1. LCD : LGE, LG5410S (LCD Controller) Including LVDS Receiver. 2. System : Pin to Pin compatible with LVDS **[Connector]** Hirose KN38-40S-0.5H UJU IS050-L40B-C10 or equivalent **[Mating Connector]** 20453-#40E-## series or equivalent **[Connector pin arrangement]** 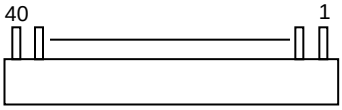 [LCD Module Rear View]
2	VCC	LCD Logic and driver power (3.3V Typ.)	
3	VCC	LCD Logic and driver power (3.3V Typ.)	
4	V EEDID	DDC Power (3.3V)	
5	Bist	LCD Panel Self Test Enable	
6	Clk EEDID	DDC Clock	
7	DATA EEDID	DDC Data	
8	ORX0-	Negative LVDS differential data input	
9	ORX0+	Positive LVDS differential data input	
10	GND	LCM Ground	
11	ORX1-	Negative LVDS differential data input	
12	ORX1+	Positive LVDS differential data input	
13	GND	LCM Ground	
14	ORX2-	Negative LVDS differential data input	
15	ORX2+	Positive LVDS differential data input	
16	GND	LCM Ground	
17	ORXC-	Negative LVDS differential clock input	
18	ORXC+	Positive LVDS differential clock input	
19	GND	LCM Ground	
20	NC	No Connection	
21	NC	No Connection	
22	GND	LCM Ground	
23	NC	No Connection	
24	NC	No Connection	
25	GND	LCM Ground	
26	NC	No Connection	
27	NC	No Connection	
28	GND	LCM Ground	
29	NC	No Connection	
30	NC	No Connection	
31	GND	LCM Ground (LED Backlight Ground)	
32	GND	LCM Ground (LED Backlight Ground)	
33	GND	LCM Ground (LED Backlight Ground)	
34	Test Loop	Dell's Test loop to 1pin	
35	PWM	System PWM Signal input for dimming	
36	LED_EN	LED Backlight On/Off	
37	DBC_EN	Dynamic Backlight Control enable	
38	VLED	LED Backlight Power (7V-21V)	
39	VLED	LED Backlight Power (7V-21V)	
40	VLED	LED Backlight Power (7V-21V)	

3-3. LVDS Signal Timing Specifications

3-3-1. DC Specification

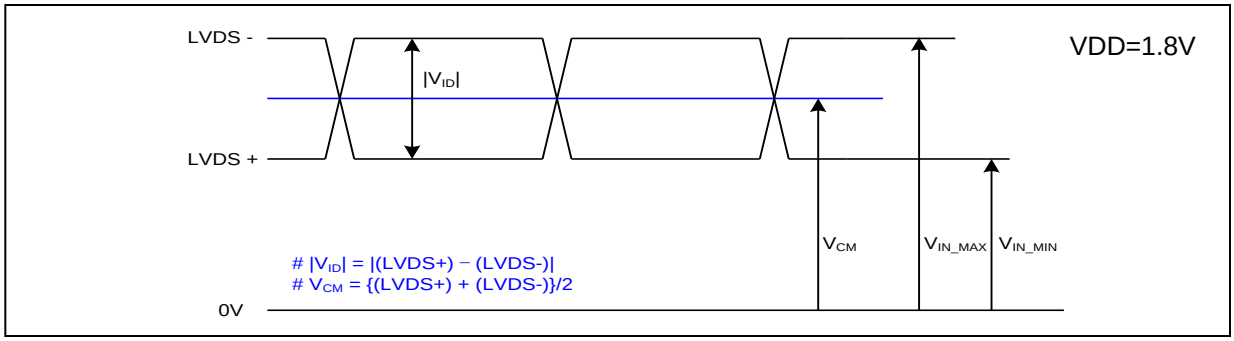

Description	Symbol	Min	Typ	Max	Unit	Notes
LVDS Differential Voltage	$\|V_{ID}\|$	100	-	600	mV	-
LVDS Common mode Voltage	V_{CM}	$\|V_{ID}\|$ /2	1.2	VDD- $\|V_{ID}\|$/2	V	-
LVDS Input Voltage Range	V_{IN}	0.3	-	VDD	V	-

3-3-2. AC Specification

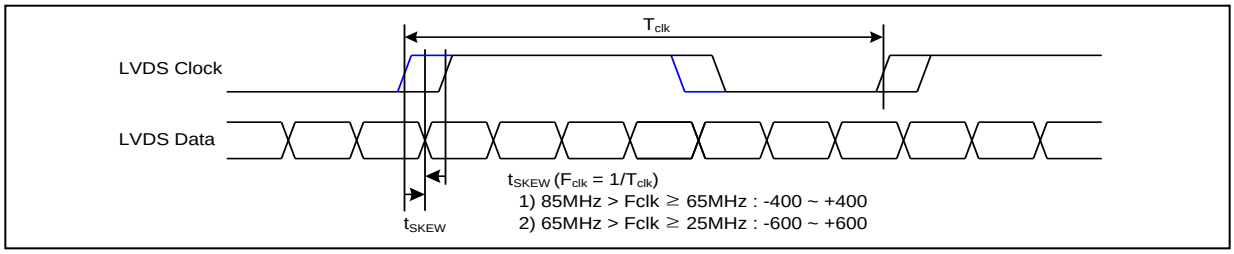

Description	Symbol	Min	Max	Unit	Notes
LVDS Clock to Data Skew Margin	t_{SKEW}	- 400	+ 400	ps	85MHz > Fclk ≥ 65MHz
	t_{SKEW}	- 600	+ 600	ps	65MHz > Fclk ≥ 25MHz
LVDS Clock to Clock Skew Margin (Even to Odd)	t_{SKEW_EO}	- 1/7	+ 1/7	T_{clk}	-
Maximum deviation of input clock frequency during SSC	F_{DEV}	-	± 3	%	-
Maximum modulation frequency of input clock during SSC	F_{MOD}	-	200	KHz	-

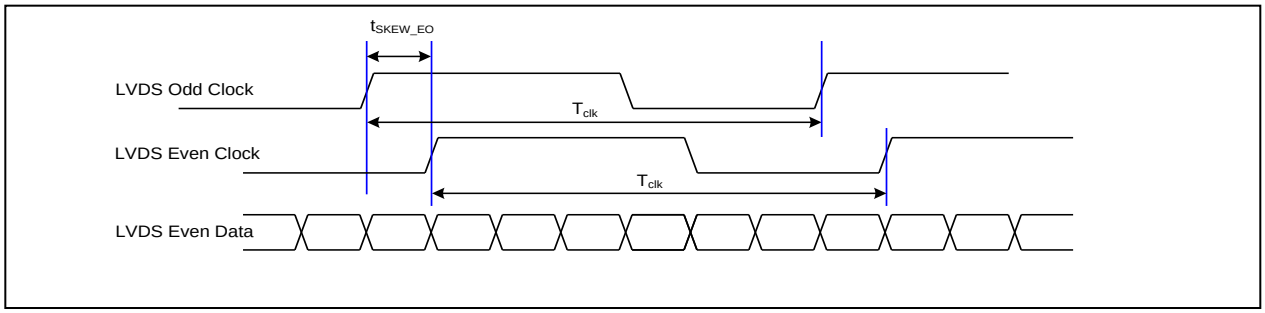

< Clock skew margin between channel >

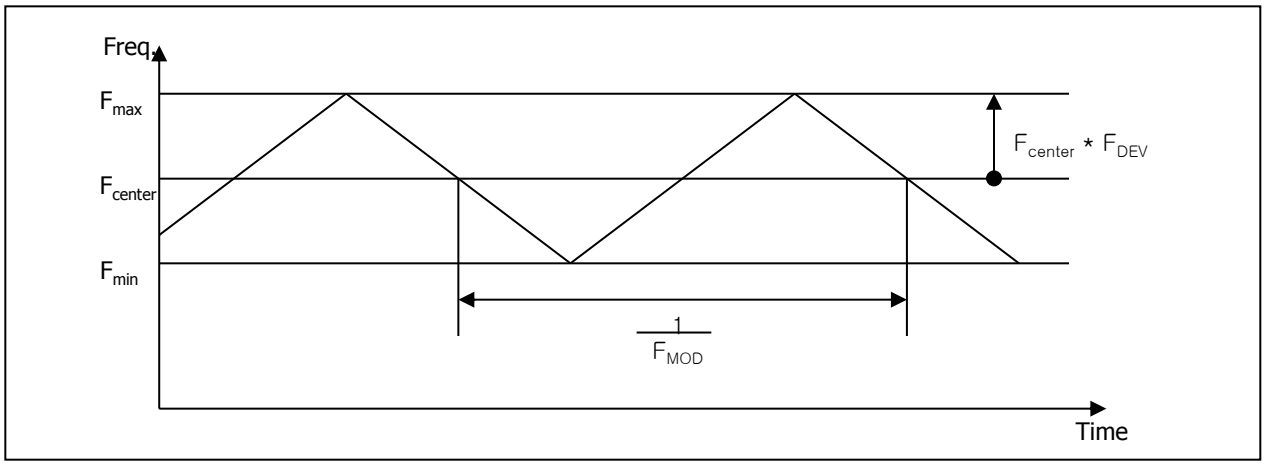

< Spread Spectrum >

3-3-3. Data Format

1) LVDS 1 Port

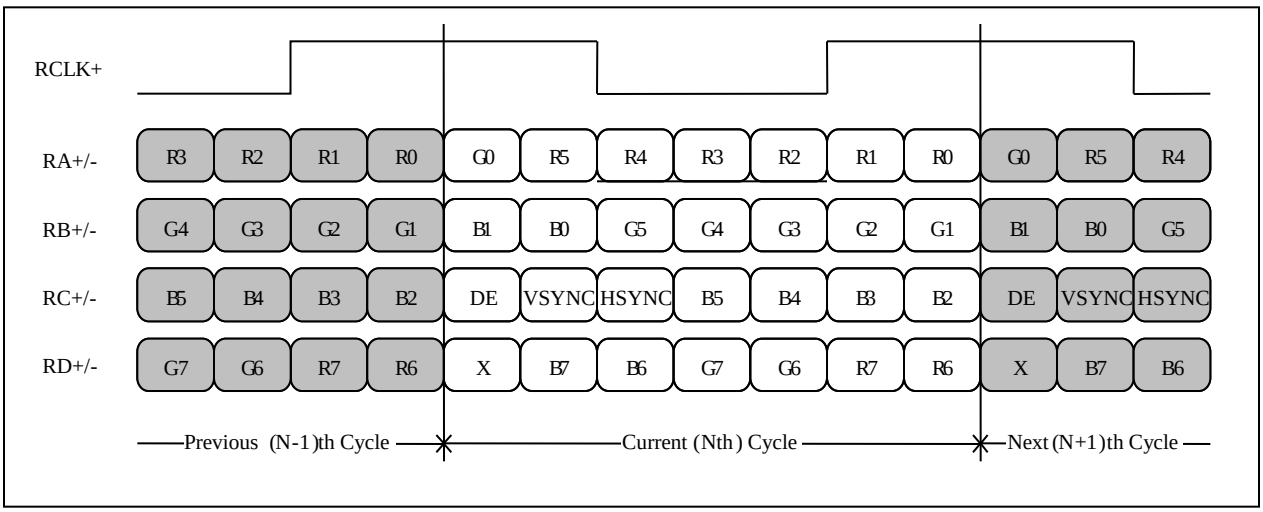

< LVDS Data Format >

3-4. Signal Timing Specifications

This is the signal timing required at the input of the User connector. All of the interface signal timing should be satisfied with the following specifications and specifications of LVDS Tx/Rx for its proper operation.

Table 4. TIMING TABLE

ITEM	Symbol		Min.	Typ.	Max.	Unit	Note
DCLK	Frequency	f_{CLK}	-	70.0	-	MHz	
Hsync	Period	t_{HP}	1464	1476	1516	tCLK	
	Width	t_{WH}	32	36	56		
	Width-Active	tw_{HA}	1366	1366	1366		
Vsync	Period	t_{VP}	776	790	792	tHP	
	Width	t_{WV}	2	8	8		
	Width-Active	tw_{VA}	768	768	768		
Data Enable	Horizontal back porch	t_{HBP}	34	38	54	tCLK	
	Horizontal front porch	t_{HFP}	32	36	40		
	Vertical back porch	t_{VBP}	4	10	12	tHP	
	Vertical front porch	t_{VFP}	2	4	4		

3-5. Signal Timing Waveforms

Condition : V_{CC} =3.3V

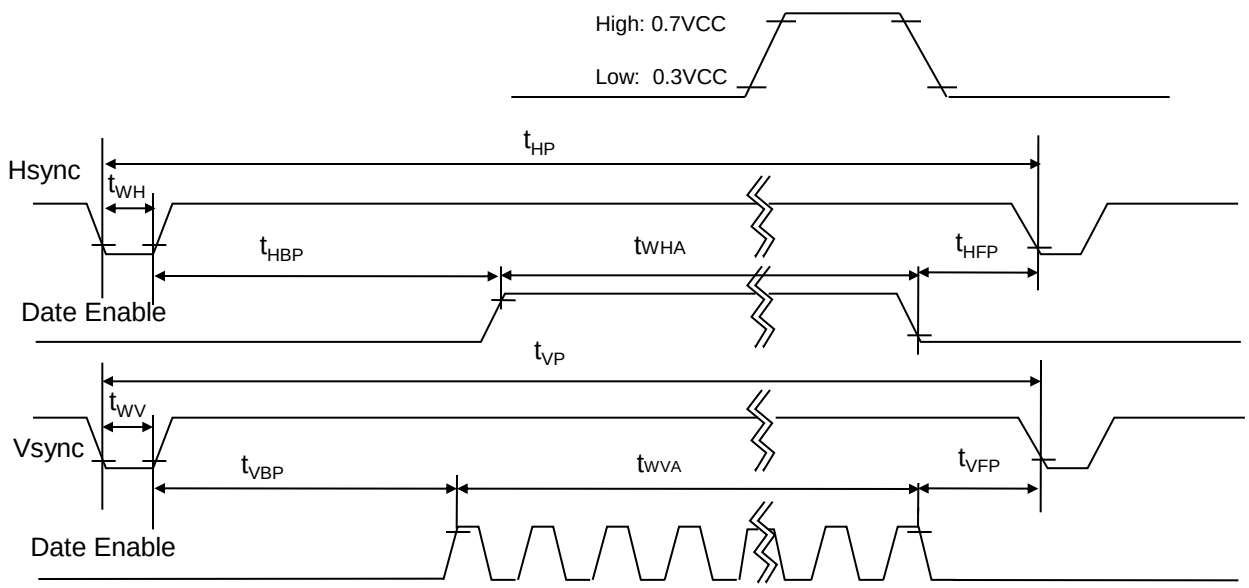

3-6. Color Input Data Reference

The brightness of each primary color (red,green and blue) is based on the 6-bit gray scale data input for the color ; the higher the binary input, the brighter the color. The table below provides a reference for color versus data input.

Table 5. COLOR DATA REFERENCE

Color		Input Color Data																	
		RED						GREEN						BLUE					
		MSB					LSB	MSB					LSB	MSB					LSB
		R 5	R 4	R 3	R 2	R 1	R 0	G 5	G 4	G 3	G 2	G 1	G 0	B 5	B 4	B 3	B 2	B 1	B 0
Basic Color	Black	0	0	0	0	0	0	0	0	0	0	0	0	0	0	0	0	0	0
	Red	1	1	1	1	1	1	0	0	0	0	0	0	0	0	0	0	0	0
	Green	0	0	0	0	0	0	1	1	1	1	1	1	0	0	0	0	0	0
	Blue	0	0	0	0	0	0	0	0	0	0	0	0	1	1	1	1	1	1
	Cyan	0	0	0	0	0	0	1	1	1	1	1	1	1	1	1	1	1	1
	Magenta	1	1	1	1	1	1	0	0	0	0	0	0	1	1	1	1	1	1
	Yellow	1	1	1	1	1	1	1	1	1	1	1	1	0	0	0	0	0	0
	White	1	1	1	1	1	1	1	1	1	1	1	1	1	1	1	1	1	1
RED	RED (00)	0	0	0	0	0	0	0	0	0	0	0	0	0	0	0	0	0	0
	RED (01)	0	0	0	0	0	1	0	0	0	0	0	0	0	0	0	0	0	0
	…	…						…						…					
	RED (62)	1	1	1	1	1	0	0	0	0	0	0	0	0	0	0	0	0	0
	RED (63)	1	1	1	1	1	1	0	0	0	0	0	0	0	0	0	0	0	0
GREEN	GREEN (00)	0	0	0	0	0	0	0	0	0	0	0	0	0	0	0	0	0	0
	GREEN (01)	0	0	0	0	0	0	0	0	0	0	0	1	0	0	0	0	0	0
	...	...						...						...					
	GREEN (62)	0	0	0	0	0	0	1	1	1	1	1	0	0	0	0	0	0	0
	GREEN (63)	0	0	0	0	0	0	1	1	1	1	1	1	0	0	0	0	0	0
BLUE	BLUE (00)	0	0	0	0	0	0	0	0	0	0	0	0	0	0	0	0	0	0
	BLUE (01)	0	0	0	0	0	0	0	0	0	0	0	0	0	0	0	0	0	1
	…	…						…						…					
	BLUE (62)	0	0	0	0	0	0	0	0	0	0	0	0	1	1	1	1	1	0
	BLUE (63)	0	0	0	0	0	0	0	0	0	0	0	0	1	1	1	1	1	1

3-7. Power Sequence

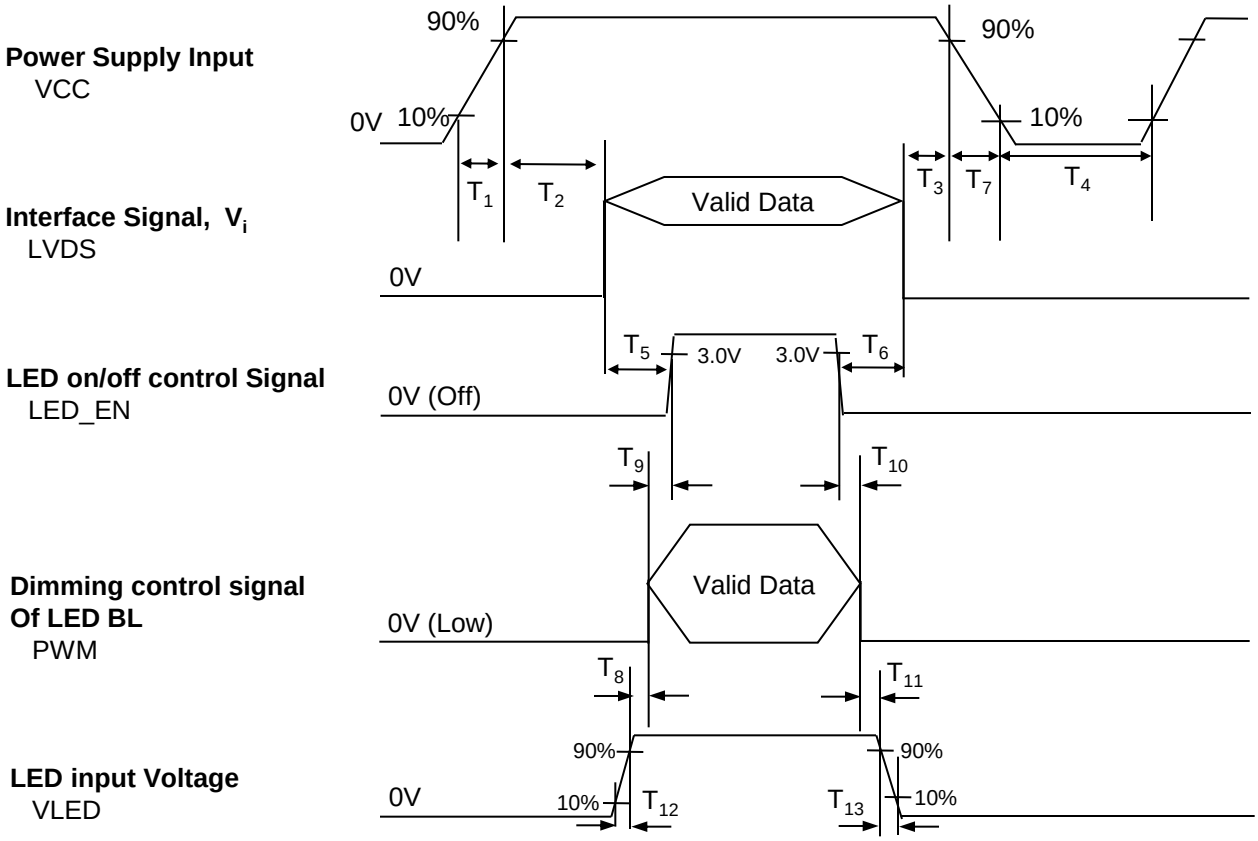

Table 6. POWER SEQUENCE TABLE

Logic Parameter	Value			Units	LED Parameter	Value			Units
	Min.	Typ.	Max.			Min.	Typ.	Max.	
T_1	0.5	-	10	ms	T_8	10	-	-	ms
T_2	0	-	50	ms	T_9	0	-	-	ms
T_3	0	-	50	ms	T_{10}	0	-	-	ms
T_4	400	-	-	ms	T_{11}	10	-	-	ms
T_5	200	-	-	ms	T_{12}	0.5	-	-	ms
T_6	200	-	-	ms	T_{13}	0	-	5000	ms
T_7	3	-	10	ms					

Note)
1. Do not insert the mating cable when system turn on.
2. Valid Data have to meet "3-3. LVDS Signal Timing Specifications"
3. LVDS, LED_EN and PWM need to be on pull-down condition on invalid status.
4. LGD recommend the rising sequence of VLED after the Vcc and valid status of LVDS turn on.

4. Optical Specification

Optical characteristics are determined after the unit has been 'ON' and stable for approximately 20 minutes in a dark environment at 25°C. The values specified are at an approximate distance 50cm from the LCD surface at a viewing angle of Φ and Θ equal to 0°.
FIG. 1 presents additional information concerning the measurement equipment and method.

FIG. 1 Optical Characteristic Measurement Equipment and Method

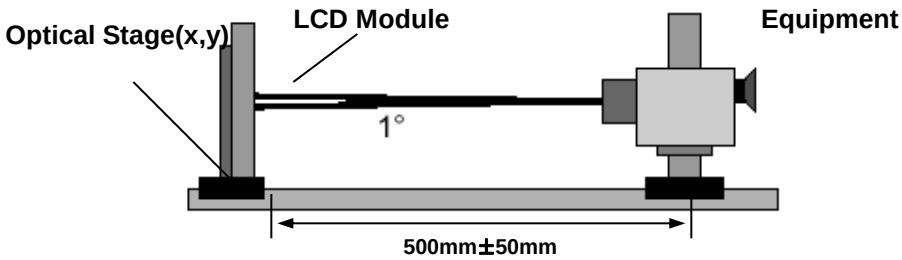

Table 7. OPTICAL CHARACTERISTICS

Ta=25°C, VCC=3.3V, fv=60Hz, f_{CLK}= 70.0MHz

Parameter		Symbol	Values			Units	Notes
			Min	Typ	Max		
Contrast Ratio		CR	400	500	-		1
Surface Luminance, white		$L_{WH\ 5P}$	170	200	-	cd/m^2	2
Luminance Variation		δ_{WHITE}	-	1.4	1.6	-	3
Response Time		$Tr_R + Tr_D$	-	16	25	ms	4
Color Coordinates							
	RED	RX	TBD	TBD	TBD		
		RY	TBD	TBD	TBD		
	GREEN	GX	TBD	TBD	TBD		
		GY	TBD	TBD	TBD		
	BLUE	BX	TBD	TBD	TBD		
		BY	TBD	TBD	TBD		
	WHITE	WX	0.283	0.313	0.343		
		WY	0.299	0.329	0.359		
Viewing Angle							5
	x axis, right(Φ=0°)	Θr	40	-	-	degree	
	x axis, left (Φ=180°)	Θl	40	-	-	degree	
	y axis, up (Φ=90°)	Θu	10	-	-	degree	
	y axis, down (Φ=270°)	Θd	30	-	-	degree	
Gray Scale							6
Color Gamut		C/G	-	45	-	%	

Note)

1. Contrast Ratio(CR) is defined mathematically as

$$\text{Contrast Ratio} = \frac{\text{Surface Luminance with all white pixels}}{\text{Surface Luminance with all black pixels}}$$

2. Surface luminance is the average of 5 point across the LCD surface 50cm from the surface with all pixels displaying white. For more information see FIG 1.

LWH = Average(L1,L2, … L5)

3. The variation in surface luminance , The panel total variation (δ WHITE) is determined by measuring LN at each test position 1 through 13 and then defined as following numerical formula. For more information see FIG 2.

$$\delta\ \text{WHITE} = \frac{\text{Maximum(L1,L2, … L13)}}{\text{Minimum(L1,L2, … L13)}}$$

4. Response time is the time required for the display to transition from white to black (rise time, TrR) and from black to white (Decay Time, TrD). For additional information see FIG 3.

5. Viewing angle is the angle at which the contrast ratio is greater than 10. The angles are determined for the horizontal or x axis and the vertical or y axis with respect to the z axis which is normal to the LCD surface. For more information see FIG 4.

6. Gray scale specification * fV = 60Hz

Gray Level	Luminance [%] (Typ)
L0	TBD
L7	TBD
L15	TBD
L23	TBD
L31	TBD
L39	TBD
L47	TBD
L55	TBD
L63	TBD

FIG. 2 Luminance

<Measuring point for Average Luminance & measuring point for Luminance variation>

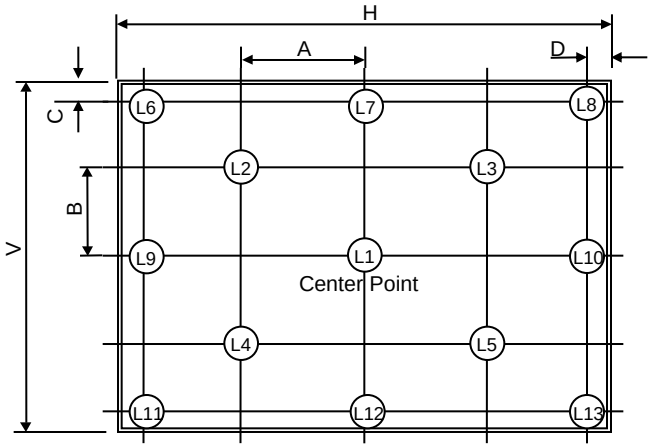

H,V : ACTIVE AREA
A : H/4 mm
B : V/4 mm
C : 10 mm
D : 10 mm
POINTS : 13 POINTS

FIG. 3 Response Time

The response time is defined as the following figure and shall be measured by switching the input signal for “black” and “white”.

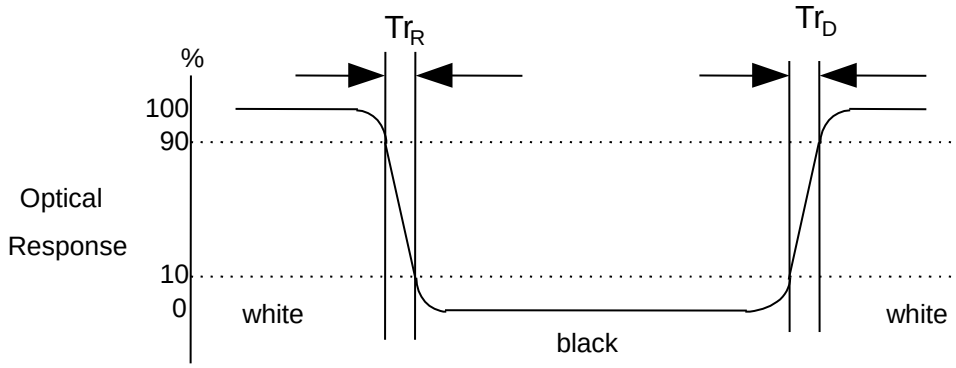

FIG. 4 Viewing angle

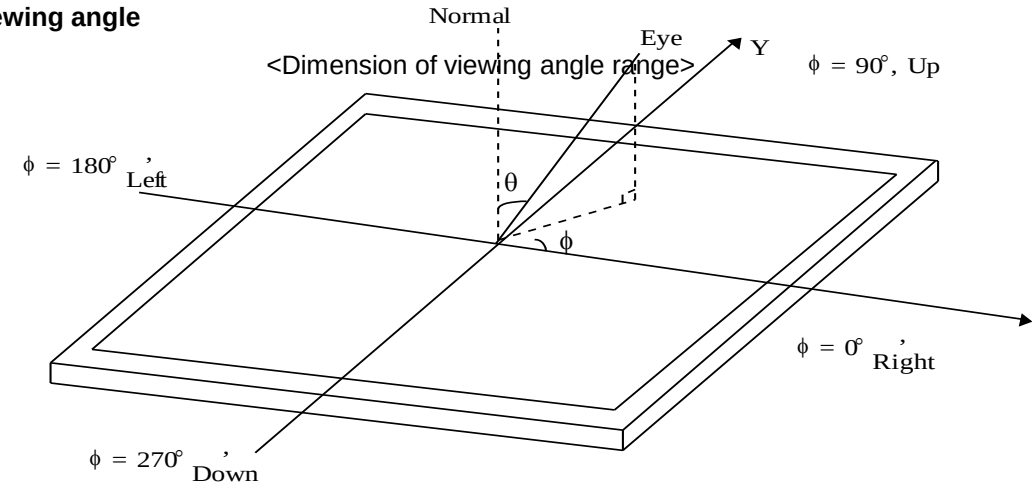

5. Mechanical Characteristics

The contents provide general mechanical characteristics for the model LP133WH2.
In addition the figures in the next page are detailed mechanical drawing of the LCD.

Outline Dimension	Horizontal	306.3 ± 0.50mm
	Vertical	177.7 ± 0.50mm
	Thickness	3.6 mm (Max.)
Bezel Area	Horizontal	297.42 mm
	Vertical	168.57 mm
Active Display Area	Horizontal	293.42mm
	Vertical	164.97 mm
Weight	300 g (Max.)	
Surface Treatment	Glare treatment of the front polarizer	

<FRONT VIEW>

Note) Unit:[mm], General tolerance: ± 0.5mm

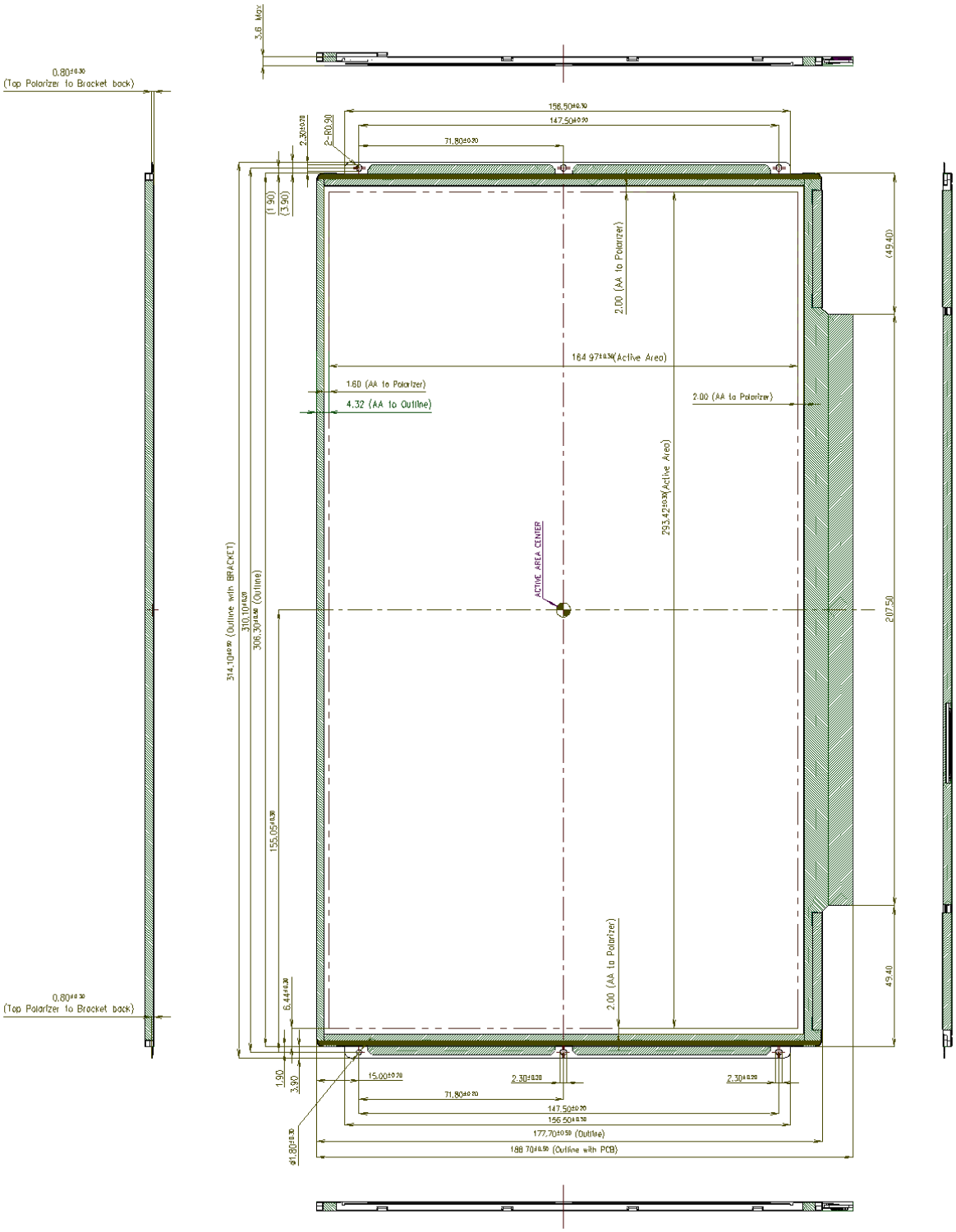

<REAR VIEW>

Note) Unit:[mm], General tolerance: ± 0.5mm

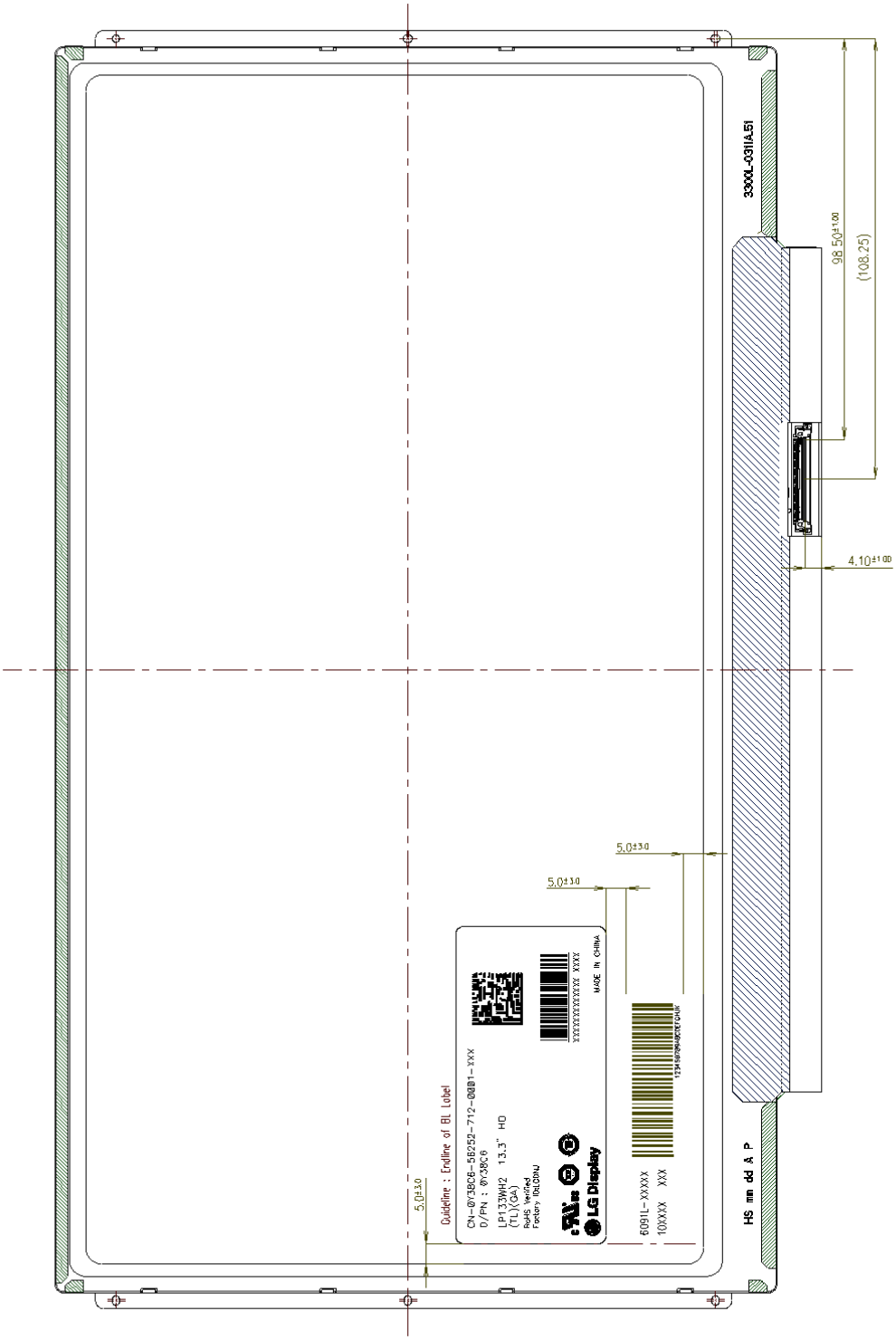

[DETAIL INFORMATION OF PPID LABEL AND REVISION CODE]

* PPID Label Revision :
It is subject to change with Dell event. Please refer to the below table for detail.

Classification	No Change	1st Revision	2nd Revision	…	9th Revision	…
SST(WS)	X00	X01	X02	…	A09	…
PT(ES)	X10	X11	X12	…	A19	…
ST(CS)	X20	X21	X22	…	A29	…
XB(MP)	A00	A01	A02	…	A09	…

Manufacturing Location	
KR	Korea
CN	China

LGD Proposal for system cover design.(Appendix)

1	Gap check for securing the enough gap between LCM and System cover.	

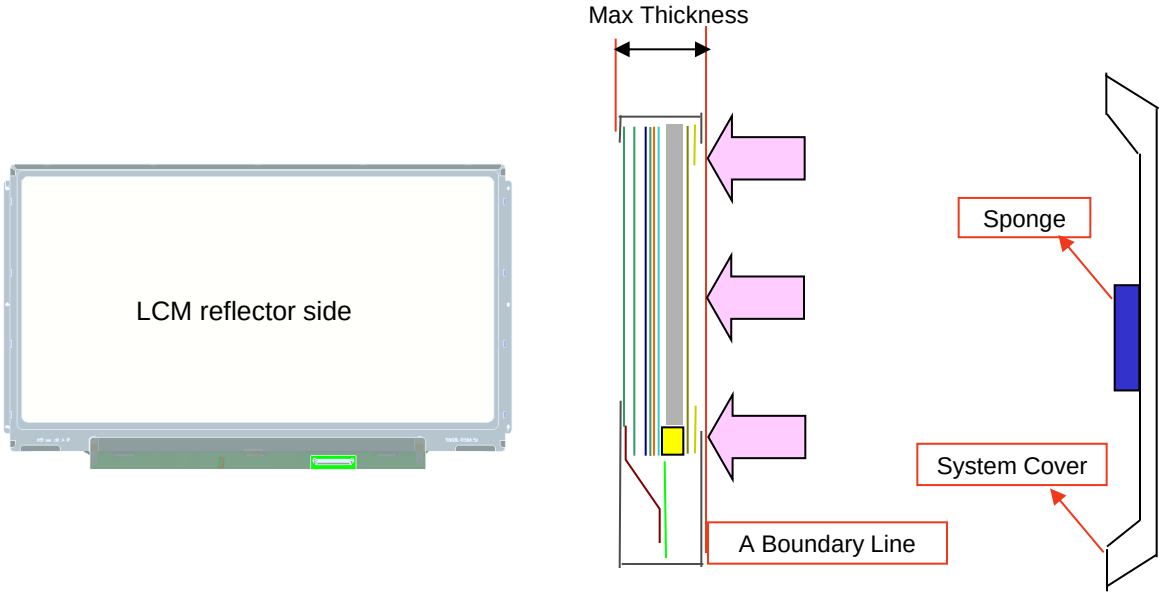

Define	1.Rear side of LCM is sensitive against external stress,and previous check about interference is highly needed.
	2.In case there is something from system cover comes into the boundary above,mechanical interference may cause the FOS defects. (Eg:Ripple,White spot..)
2	Check if antenna cable is sufficiently apart from T-CON of LCD Module.
Define	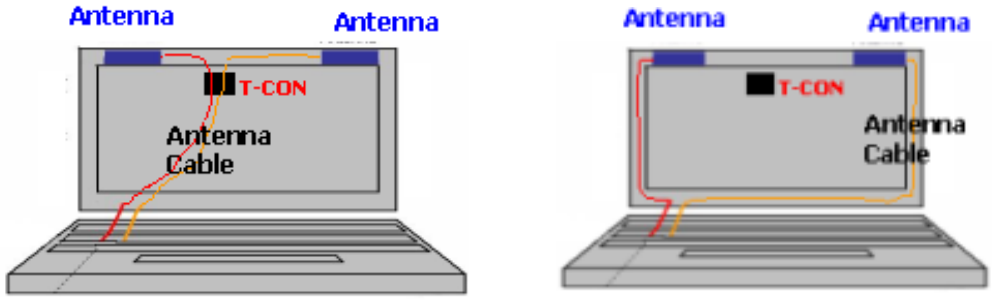 NO GOOD GOOD
	1.If system antenna is overlapped with T-CON,it might be cause the noise.

LGD Proposal for system cover design.

3	Gap check for securing the enough gap between LCM and System hinge.	

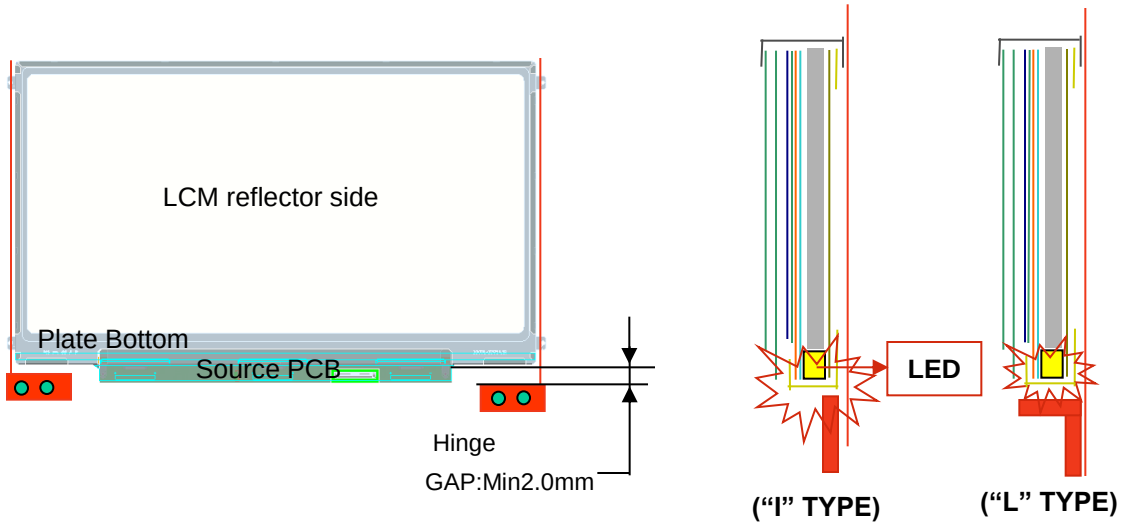

Define	1.At least 2.0mm of gap needs to be secured to prevent the shock related defects.
	2."L" type of hinge is recommended than "I" type under shock test.
4	Checking the path of the System wire.

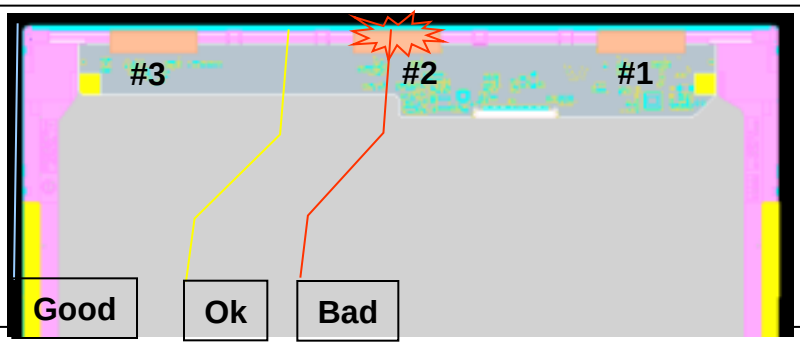

Define	1.COF area needs to be handled with care.
	2.GOOD ➔Wire path design to system side. OK➔ Wire path is located between COFs. BAD➔Wire path overlapped with COF area.

LGD Proposal for system cover design.

5	Using a bracket on the top of LCM is not recommended.	

bracket

With bracket

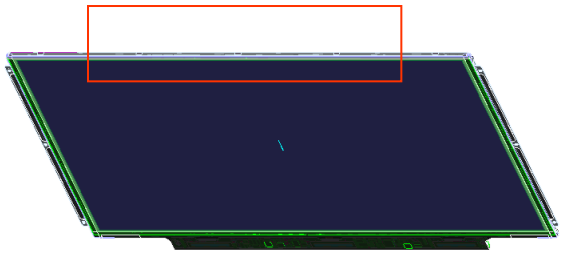

Without bracket

Define	1.Condition without bracket is good for mechanical noise,and can minimize the light leakage from deformation of bracket.
	2.The results shows that there is no difference between the condition with or without bracket.
6	Securing additional gap on CNT area..

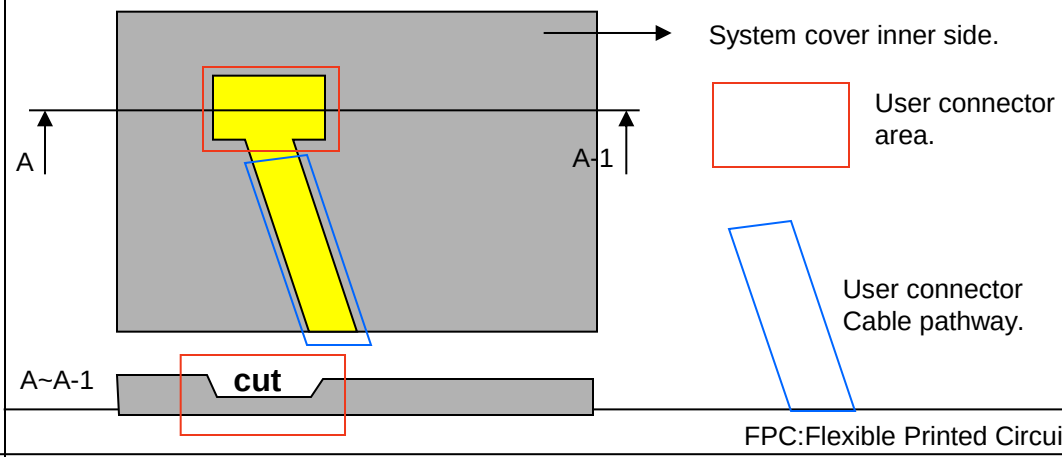

Define	1.CNT area is specially sensitive against external stress,and additional gap by cutting on system cover will be helpful on removing the Ripple. 2.Using a thinner CNT will be better. (eg: FPC type)

6. Reliability

Environment test condition

No.	Test Item	Conditions
1	High temperature storage test	Ta= 60°C, 240h
2	Low temperature storage test	Ta= -20°C, 240h
3	High temperature operation test	Ta= 50°C, 50%RH, 240h
4	Low temperature operation test	Ta= 0°C, 240h
5	Vibration test (non-operating)	Sine wave, 5 ~ 150Hz, 1.5G, 0.37oct/min 3 axis, 30min/axis
6	Shock test (non-operating)	- No functional or cosmetic defects following a shock to all 6 sides delivering at least 180 G in a half sine pulse no longer than 2 ms to the display module - No functional defects following a shock delivering at least 200 g in a half sine pulse no longer than 2 ms to each of 6 sides. Each of the 6 sides will be shock tested with one each display, for a total of 6 displays
7	Altitude operating storage / shipment	0 ~ 10,000 feet (3,048m) 24Hr 0 ~ 40,000 feet (12,192m) 24Hr

{ Result Evaluation Criteria }

There should be no change which might affect the practical display function when the display quality test is conducted under normal operating condition.

7. International Standards

7-1. Safety

a) UL 60950-1, Underwriters Laboratories Inc.
Information Technology Equipment - Safety - Part 1 : General Requirements.

b) CAN/CSA C22.2 No.60950-1-07, Canadian Standards Association.
Information Technology Equipment - Safety - Part 1 : General Requirements.

c) EN 60950-1, European Committee for Electrotechnical Standardization (CENELEC).
Information Technology Equipment - Safety - Part 1 : General Requirements.

d) IEC 60950-1, The International Electrotechnical Commission (IEC).
Information Technology Equipment - Safety - Part 1 : General Requirements.

8. Packing

8-1. Designation of Lot Mark

a) Lot Mark

A	B	C	D	E	F	G	H	I	J	K	L	M

A,B,C : SIZE(INCH)
E : MONTH
D : YEAR
F ~ M : SERIAL NO.

Note

1. YEAR

Year	2011	2012	2013	2014	2015	2016	2017	2018	2019	2020
Mark	A	B	C	D	E	F	G	H	J	K

2. MONTH

Month	Jan	Feb	Mar	Apr	May	Jun	Jul	Aug	Sep	Oct	Nov	Dec
Mark	1	2	3	4	5	6	7	8	9	A	B	C

b) Location of Lot Mark

Serial No. is printed on the label. The label is attached to the backside of the LCD module.
This is subject to change without prior notice.

8-2. Packing Form

a) Package quantity in one box : 20pcs

b) Box Size : 422mm X 340mm X 257mm

9. PRECAUTIONS

Please pay attention to the followings when you use this TFT LCD module.

9-1. MOUNTING PRECAUTIONS

(1) You must mount a module using holes arranged in four corners or four sides.
(2) You should consider the mounting structure so that uneven force (ex. Twisted stress) is not applied to the module. And the case on which a module is mounted should have sufficient strength so that external force is not transmitted directly to the module.
(3) Please attach the surface transparent protective plate to the surface in order to protect the polarizer. Transparent protective plate should have sufficient strength in order to the resist external force.
(4) You should adopt radiation structure to satisfy the temperature specification.
(5) Acetic acid type and chlorine type materials for the cover case are not desirable because the former generates corrosive gas of attacking the polarizer at high temperature and the latter causes circuit break by electro-chemical reaction.
(6) Do not touch, push or rub the exposed polarizers with glass, tweezers or anything harder than HB pencil lead. And please do not rub with dust clothes with chemical treatment.
Do not touch the surface of polarizer for bare hand or greasy cloth.(Some cosmetics are detrimental to the polarizer.)
(7) When the surface becomes dusty, please wipe gently with absorbent cotton or other soft materials like chamois soaks with petroleum benzene. Normal-hexane is recommended for cleaning the adhesives used to attach front / rear polarizers. Do not use acetone, toluene and alcohol because they cause chemical damage to the polarizer.
(8) Wipe off saliva or water drops as soon as possible. Their long time contact with polarizer causes deformations and color fading.
(9) Do not open the case because inside circuits do not have sufficient strength.
(10) When handling the LCD module, it needs to handle with care not to give mechanical stress to the PCB and Mounting Hole area."

9-2. OPERATING PRECAUTIONS

(1) The spike noise causes the mis-operation of circuits. It should be lower than following voltage :
V=± 200mV(Over and under shoot voltage)

(2) Response time depends on the temperature.(In lower temperature, it becomes longer.)
(3) Brightness depends on the temperature. (In lower temperature, it becomes lower.)
And in lower temperature, response time(required time that brightness is stable after turned on) becomes longer.
(4) Be careful for condensation at sudden temperature change. Condensation makes damage to polarizer or electrical contacted parts. And after fading condensation, smear or spot will occur.
(5) When fixed patterns are displayed for a long time, remnant image is likely to occur.
(6) Module has high frequency circuits. Sufficient suppression to the electromagnetic interference shall be done by system manufacturers. Grounding and shielding methods may be important to minimized the interference.

9-3. ELECTROSTATIC DISCHARGE CONTROL

Since a module is composed of electronic circuits, it is not strong to electrostatic discharge. Make certain that treatment persons are connected to ground through wrist band etc. And don't touch interface pin directly.

9-4. PRECAUTIONS FOR STRONG LIGHT EXPOSURE

Strong light exposure causes degradation of polarizer and color filter.

9-5. STORAGE

When storing modules as spares for a long time, the following precautions are necessary.

(1) Store them in a dark place. Do not expose the module to sunlight or fluorescent light. Keep the temperature between 5°C and 35°C at normal humidity.
(2) The polarizer surface should not come in contact with any other object.
It is recommended that they be stored in the container in which they were shipped.

9-6. HANDLING PRECAUTIONS FOR PROTECTION FILM

(1) When the protection film is peeled off, static electricity is generated between the film and polarizer. This should be peeled off slowly and carefully by people who are electrically grounded and with well ion-blown equipment or in such a condition, etc.
(2) The protection film is attached to the polarizer with a small amount of glue. If some stress is applied to rub the protection film against the polarizer during the time you peel off the film, the glue is apt to remain on the polarizer.
Please carefully peel off the protection film without rubbing it against the polarizer.
(3) When the module with protection film attached is stored for a long time, sometimes there remains a very small amount of glue still on the polarizer after the protection film is peeled off.
(4) You can remove the glue easily. When the glue remains on the polarizer surface or its vestige is recognized, please wipe them off with absorbent cotton waste or other soft material like chamois soaked with normal-hexane.

APPENDIX A. Enhanced Extended Display Identification Data (EEDID™) 1/3

	Byte (Dec)	Byte (Hex)	Field Name and Comments	Value (Hex)	Value (Bin)
Header	0	00	Header	00	00000000
	1	01	Header	FF	11111111
	2	02	Header	FF	11111111
	3	03	Header	FF	11111111
	4	04	Header	FF	11111111
	5	05	Header	FF	11111111
	6	06	Header	FF	11111111
	7	07	Header	00	00000000
Vendor / Product	8	08	ID Manufacture Name LGD	30	00110000
	9	09	ID Manufacture Name	E4	11100100
	10	0A	ID Product Code 0355h	55	01010101
	11	0B	(Hex. LSB first)	03	00000011
	12	0C	ID Serial No. - Optional ("00h" If not used, Number Only and LSB First)	00	00000000
	13	0D	ID Serial No. - Optional ("00h" If not used, Number Only and LSB First)	00	00000000
	14	0E	ID Serial No. - Optional ("00h" If not used, Number Only and LSB First)	00	00000000
	15	0F	ID Serial No. - Optional ("00h" If not used, Number Only and LSB First)	00	00000000
	16	10	Week of Manufacture - Optinal 00 weeks	00	00000000
	17	11	Year of Manufacture 2011 years	15	00010101
	18	12	EDID structure version # = 1	01	00000001
	19	13	EDID revision # = 4	04	00000100
Display	20	14	Video input Definition = Input is a Digital Video signal Interface , Colo Bit Depth : 6 Bits per Primary Color , Digital Video Interface Standard Supported: Digital Interface is not defined	90	10010000
	21	15	Horizontal Screen Size (Rounded cm) = 29 cm	1D	00011101
	22	16	Vertical Screen Size (Rounded cm) = 16 cm	10	00010000
	23	17	Display Transfer Characteristic (Gamma) = (gamma*100)-100 = Example:(2.2*100)-100=120 = 2.2 Gamma	78	01111000
	24	18	Feature Support [Display Power Management(DPM) : Standby Mode is not supported, Suspend Mode is not supported, Active Off = Very Low Power is not supported ,Supportted Color Encoding Formats : RGB 4:4:4 ,Other Feature Support Flags : No_sRGB, Preferred Timing Mode, No_Display is continuous frequency (Multi-mode_Base EDID and Extension Block).]	02	00000010
Vendor / Product	25	19	Red/Green Low Bits (RxRy/GxGy)	00	00000000
	26	1A	Blue/White Low Bits (BxBy/WxWy)	05	00000101
	27	1B	Red X Rx = 00	00	00000000
	28	1C	Red Y Ry = 00	00	00000000
	29	1D	Green X Gx = 00	00	00000000
	30	1E	Green Y Gy = 00	00	00000000
	31	1F	Blue X Bx = 00	00	00000000
	32	20	Blue Y By = 00	00	00000000
	33	21	White X Wx = 0.313	50	01010000
	34	22	White Y Wy = 0.329	54	01010100
Established	35	23	Established timing 1 (Optional_00h if not used)	00	00000000
	36	24	Established timing 2 (Optional_00h if not used)	00	00000000
	37	25	Manufacturer's timings (Optional_00h if not used)	00	00000000
Standard Timing ID	38	26	Standard timing ID1 (Optional_01h if not used)	01	00000001
	39	27	Standard timing ID1 (Optional_01h if not used)	01	00000001
	40	28	Standard timing ID2 (Optional_01h if not used)	01	00000001
	41	29	Standard timing ID2 (Optional_01h if not used)	01	00000001
	42	2A	Standard timing ID3 (Optional_01h if not used)	01	00000001
	43	2B	Standard timing ID3 (Optional_01h if not used)	01	00000001
	44	2C	Standard timing ID4 (Optional_01h if not used)	01	00000001
	45	2D	Standard timing ID4 (Optional_01h if not used)	01	00000001
	46	2E	Standard timing ID5 (Optional_01h if not used)	01	00000001
	47	2F	Standard timing ID5 (Optional_01h if not used)	01	00000001
	48	30	Standard timing ID6 (Optional_01h if not used)	01	00000001
	49	31	Standard timing ID6 (Optional_01h if not used)	01	00000001
	50	32	Standard timing ID7 (Optional_01h if not used)	01	00000001
	51	33	Standard timing ID7 (Optional_01h if not used)	01	00000001
	52	34	Standard timing ID8 (Optional_01h if not used)	01	00000001
	53	35	Standard timing ID8 (Optional_01h if not used)	01	00000001

APPENDIX A. Enhanced Extended Display Identification Data (EEDID™) 2/3

	Byte (Dec)	Byte (Hex)	Field Name and Comments	Value (Hex)	Value (Bin)
Timing Descriptor #1	54	36	Pixel Clock/10,000 (LSB) 70 MHz @ 60Hz	58	01011000
	55	37	Pixel Clock/10,000 (MSB)	1B	00011011
	56	38	Horizontal Active (HA) (lower 8 bits) 1366 Pixels	56	01010110
	57	39	Horizontal Blanking (HB) (lower 8 bits) 110 Pixels	6E	01101110
	58	3A	Horizontal Active / Horizontal Blanking(HA HB) (upper 4:4bits)	50	01010000
	59	3B	Vertical Avtive (VA) 768 Lines	00	00000000
	60	3C	Vertical Blanking (VB) (DE Blanking typ.for DE only panels) 22 Lines	16	00010110
	61	3D	Vertical Active / Vertical Blanking (VA VB) (upper 4:4bits)	30	00110000
	62	3E	Horizontal Front Porch in pixels (HF) (lower 8 bits)36 Pixels	24	00100100
	63	3F	Horizontal Sync Pulse Width in pixels (HS) (lower 8 bits) 36 Pixels	24	00100100
	64	40	Vertical Front Porch in lines (VF) (lower 4 bits) : Vertical Sync Pluse Width in lines (VS) (lower 4 bits)	48	01001000
	65	41	Horizontal Front Porch/ Sync Pulse Width/ Vertical Front Porch/ Sync Pulse Width (upper 2bits)	00	00000000
	66	42	Horizontal Vedio Image Size (mm) (lower 8 bits) 293 mm	25	00100101
	67	43	Vertical Vedio Image Size (mm) (lower 8 bits) 165 mm	A5	10100101
	68	44	Horizontal Image Size / Vertical Image Size (upper 4 bits)	10	00010000
	69	45	Horizontal Border = 0 (Zero for Notebook LCD)	00	00000000
	70	46	Vertical Border = 0 (Zero for Notebook LCD)	00	00000000
	71	47	Non-Interlace, Normal display, no stereo, Digital Separate [Vsync_NEG, Hsync_POS (outside of V-sync)]	1A	00011010
Timing Descriptor #2	72	48	Pixel Clock/10,000 (LSB) 46.7 MHz @ 40.1Hz	3E	00111110
	73	49	Pixel Clock/10,000 (MSB)	12	00010010
	74	4A	Horizontal Active (HA) (lower 8 bits) 1366 Pixels	56	01010110
	75	4B	Horizontal Blanking (HB) (lower 8 bits) 110 Pixels	6E	01101110
	76	4C	Horizontal Active / Horizontal Blanking(HA HB) (upper 4:4bits)	50	01010000
	77	4D	Vertical Avtive (VA) 768 Lines	00	00000000
	78	4E	Vertical Blanking (VB) (DE Blanking typ.for DE only panels) 22 Lines	16	00010110
	79	4F	Vertical Active / Vertical Blanking (VA VB) (upper 4:4bits)	30	00110000
	80	50	Horizontal Front Porch in pixels (HF) (lower 8 bits)36 Pixels	24	00100100
	81	51	Horizontal Sync Pulse Width in pixels (HS) (lower 8 bits) 36 Pixels	24	00100100
	82	52	Vertical Front Porch in lines (VF) (lower 4 bits) : Vertical Sync Pluse Width in lines (VS) (lower 4 bits)	48	01001000
	83	53	Horizontal Front Porch/ Sync Pulse Width/ Vertical Front Porch/ Sync Pulse Width (upper 2bits)	00	00000000
	84	54	Horizontal Vedio Image Size (mm) (lower 8 bits) 293 mm	25	00100101
	85	55	Vertical Vedio Image Size (mm) (lower 8 bits) 165 mm	A5	10100101
	86	56	Horizontal Image Size / Vertical Image Size (upper 4 bits)	10	00010000
	87	57	Horizontal Border = 0 (Zero for Notebook LCD)	00	00000000
	88	58	Vertical Border = 0 (Zero for Notebook LCD)	00	00000000
	89	59	Non-Interlace, Normal display, no stereo, Digital Separate [Vsync_NEG, Hsync_POS (outside of V-sync)]	1A	00011010
Timing Descriptor #3	90	5A	Flag	00	00000000
	91	5B	Flag	00	00000000
	92	5C	Flag	00	00000000
	93	5D	Data Type Tag : Alphanumeric Data String (ASCII String)	FE	11111110
	94	5E	Flag	00	00000000
	95	5F	Dell P/N 1st Character = Y	59	01011001
	96	60	Dell P/N 2nd Character = 3	33	00110011
	97	61	Dell P/N 3rd Character = 8	38	00111000
	98	62	Dell P/N 4th Character = C	43	01000011
	99	63	Dell P/N 5th Character = 6	36	00110110
	100	64	EDID Revision Build Name = SSI (WS) , Revision # = X00	00	00000000
	101	65	Manufacturer P/N = 1	31	00110001
	102	66	Manufacturer P/N = 3	33	00110011
	103	67	Manufacturer P/N = 3	33	00110011
	104	68	Manufacturer P/N = W	57	01010111
	105	69	Manufacturer P/N = H	48	01001000
	106	6A	Manufacturer P/N = 2	32	00110010
	107	6B	Manufacturer P/N (If < 13 char, then terminate with ASCⅡ code 0Ah,set remaining char = 20h)	0A	00001010

APPENDIX A. Enhanced Extended Display Identification Data (EEDID™) 3/3

	Byte (Dec)	Byte (Hex)	Field Name and Comments	Value (Hex)	Value (Bin)
Timing Descriptor #4	108	6C	Flag	00	00000000
	109	6D	Flag	00	00000000
	110	6E	Flag	00	00000000
	111	6F	Data Type Tag : Descriptor Defined by manufacturer	00	00000000
	112	70	Flag	00	00000000
	113	71	Color Management [No +2 FRC Support, True Color Depth : 6 bit]	00	00000000
	114	72	Panel Type [WLED] , Configuration [Single light bar], Number Lamp or LED Light Bar [one]	41	01000001
	115	73	Frame Rate Details [Minimum Frame Rate : 40Hz, Maximum Frame Rate : 65Hz , Tcon provides native Intel No DRRS / sDRRS support]	01	00000001
	116	74	Controller Interface and Maximum Luminance [PWM type, 200 nit]	94	10010100
	117	75	Front Surface / Polarizer [Glossy/True-life, No Transflective] , Pixel Structure [RGB v-stripe]	01	00000001
	118	76	Multi-Media Features [Color Management : NTSC, Dynamic Backlight Control : Type 1]	10	00010000
	119	77	Multi-Media Features [Motion Blur : No support , Active Gamma Control : No support]	00	00000000
	120	78	Special Features [Wireless Enhancement Hardware : No support , In-Cell Scanner : No support]	00	00000000
	121	79	Special Features [Number of LVDS channels or eDP lanes : one , Overdrive : No ,Interface : LVDS , In-Cell Touch Support : No]	01	00000001
	122	7A	Special Features [BIST Support : yes , Electronic Privacy : No electronic privacy hardware support , 3-D Support : No]	01	00000001
	123	7B	(If<13 char--> 0Ah, then terminate with ASCⅡ code 0Ah,set remaining char = 20h)	0A	00001010
	124	7C	(If<13 char--> 0Ah, then terminate with ASCⅡ code 0Ah,set remaining char = 20h)	20	00100000
	125	7D	(If<13 char--> 0Ah, then terminate with ASCⅡ code 0Ah,set remaining char = 20h)	20	00100000
Checksum	126	7E	Extension flag (# of optional 128 panel ID extension block to follow, Typ = 0)	00	00000000
	127	7F	Check Sum (The 1-byte sum of all 128 bytes in this panel ID block shall = 0)	31	00110001