TFT LCD Approval Specification

MODEL NO.: N150X3 - L05

Customer:

Approved by:

Note:

Liquid Crystal Display Division		
QRA Dept.	TDD I Dept.	PDD I Dept.
Approval	Approval	Approval
陳 92. 2. 17 永一	李汪洋 92.02.17	林 92. 2. 17 添仁

- CONTENTS -

REVISION HISTORY

1. GENERAL DESCRIPTION
   1.1 OVERVIEW
   1.2 FEATURES
   1.3 APPLICATION
   1.4 GENERAL SPECIFICATIONS
   1.5 MECHANICAL SPECIFICATIONS

2. ABSOLUTE MAXIMUM RATINGS
   2.1 ABSOLUTE RATINGS OF ENVIRONMENT
   2.2 ELECTRICAL ABSOLUTE RATINGS
      2.2.1 TFT LCD MODULE
      2.2.2 BACKLIGHT UNIT

3. ELECTRICAL CHARACTERISTICS
   3.1 TFT LCD MODULE
   3.2 BACKLIGHT UNIT

4. BLOCK DIAGRAM
   4.1 TFT LCD MODULE
   4.2 BACKLIGHT UNIT

5. INPUT TERMINAL PIN ASSIGNMENT
   5.1 TFT LCD MODULE
   5.2 BACKLIGHT UNIT
   5.3 TIMING DIAGRAM OF LVDS INPUT SIGNAL
   5.4 COLOR DATA INPUT ASSIGNMENT

6. INTERFACE TIMING
   6.1 INPUT SIGNAL TIMING SPECIFICATIONS
   6.2 POWER ON/OFF SEQUENCE

7. OPTICAL CHARACTERISTICS
   7.1 TEST CONDITIONS
   7.2 OPTICAL SPECIFICATIONS

8. PRECAUTIONS
   8.1 ASSEMBLY AND HANDLING PRECAUTIONS
   8.2 SAFETY PRECAUTIONS

9. DEFINITION OF LABELS
   9.1 CMO MODULE LABEL
   9.2 CMO CARTON LABEL

10. PACKAGING
   10.1 Packing Specification
   10.2 Packing Method

REVISION HISTORY

Version	Date	Page (New)	Section	Description
Ver 0.0	Nov.20,'02	All	All	Tentative Specification was first issued.
Ver 1.0	Dec.30, '02	8	3.2	Modify Note (5) lamp current to be 6.5 mArms
Ver 2.0	Feb.17,'03	4	1.5	Modify Vertical(V) of Module Size to be Min. 241.5 Typ. 242 Max. 242.5 Add Min. Depth(D) of Module Size: 5.4 Modify Weight typ. 505 instead of 520 Add Min. Weight 490 & Max. 520
		6	3.1	Add typ. of Rush current to be 1.2 Add typ. of Power Supply current – White "300" & Black"400"
		8	3.2	 Add min. 608 & max. 743 of Lamp Input Voltage Modify Lamp Current max 6.5 instead of 7.5 and delete typ. value Modify Lamp Turn on Voltage max. 1360 instead of 1100
		9	5.1	Modify "INPUT TERMINAL PIN ASSIGNMENT" Add the Remark of Pin 4 to be "DCC 3.3V Power" Add the Remark of Pin 6 to be "DDC Clock" Add the Remark of Pin 7 to be "DDC data" modify Remark's contents of Pin 8~18
		10	5.2	Modify Note (1) Connector Part No. to be "JST-BHSR-02VS-1"
		11	6.1	Modify INPUT SIGNAL TIMING SPECIFICATIONS modify min. of DCLK frequency to be "50" modify max. of DE Horizontal Total time to be"1500"
		13	7.1	Add Inverter to be "H05-4915"
		13	7.2	Modify OPTICAL SPECIFICATIONS Add Contrast Ratio of min. to be "200" Add Response Time - T_R of max. to be "10"; T_F of max. to be "25" Add Color Chromaticity value Rx min.=0.570 typ.=0.600 max.=0.630 Ry min.=0.313 typ.=0.343 max.=0.373 Gx min.=0.294 typ.=0.324 max.=0.354 Gy min.=0.506 typ.=0.536 max.=0.566 Bx min.=0.122 typ.=0.152 max.=0.182 By min.=0.102 typ.=0.132 max.=0.162 Wx min.=0.283 max.=0.343 Wy min.=0.299 max.=0.359
		20,21	10	Add PACKING section

1. GENERAL DESCRIPTION

1.1 OVERVIEW

N150X3 - L05 is a 15.0" TFT Liquid Crystal Display module with single CCFL Backlight unit and 30 pins LVDS interface. This module supports 1024 x 768 XGA mode and can display 262,144 colors. The optimum viewing angle is at 6 o'clock direction. The inverter module for Backlight is not built in.

1.2 FEATURES

- Thin and Light Weight
- XGA (1024 x 768 pixels) resolution
- DE only mode
- 3.3V LVDS (Low Voltage Differential Signaling) interface with 1 pixel/clock

1.3 APPLICATION

- TFT LCD Notebook

1.4 GENERAL SPECIFICATI0NS

Item	Specification	Unit	Note
Active Area	304.1 (H) x 228.1 (V) (15.0" diagonal)	mm	(1)
Bezel Opening Area	307.8 (H) x 231.6 (V)	mm	
Driver Element	a-si TFT active matrix	-	-
Pixel Number	1024 x R.G.B. x 768	pixel	-
Pixel Pitch	0.297 (H) x 0.297 (V)	mm	-
Pixel Arrangement	RGB vertical stripe	-	-
Display Colors	262,144	color	-
Transmissive Mode	Normally white	-	-
Surface Treatment	Hard coating (3H), Anti-glare (Haze 25 %)	-	-

1.5 MECHANICAL SPECIFICATIONS

Item		Min.	Typ.	Max.	Unit	Note
Module Size	Horizontal(H)	316.8	317.3	317.8	mm	(1)
	Vertical(V)	241.5	242	242.5	mm	
	Depth(D)	5.4	5.7	6.0	mm	
Weight		490	505	520	g	-

Note (1) Please refer to the attached drawings for more information of front and back outline dimensions.

2. ABSOLUTE MAXIMUM RATINGS

2.1 ABSOLUTE RATINGS OF ENVIRONMENT

Item	Symbol	Value		Unit	Note
		Min.	Max.		
Storage Temperature	T_{ST}	-20	+60	ºC	(1)
Operating Ambient Temperature	T_{OP}	0	+50	ºC	(1), (2)
Shock (Non-Operating)	S_{NOP}	-	200	G	(3), (5)
Vibration (Non-Operating)	V_{NOP}	-	2.0	G	(4), (5)

Note (1) Temperature and relative humidity range is shown in the figure below.

(a) 90 %RH Max. (Ta ≦ 40 ºC).

(b) Wet-bulb temperature should be 39 ºC Max. (Ta > 40 ºC).

(c) No condensation.

Note (2) The ambient temperature means the temperature of panel surface.

Note (3) 2ms, half sine wave, 1 times for ± X, ± Y, ± Z.

Note (4) 10 ~ 500 Hz, 0.5 Hr/Cycle,(4)cycles each X, Y, Z. The fixing condition is shown as below:

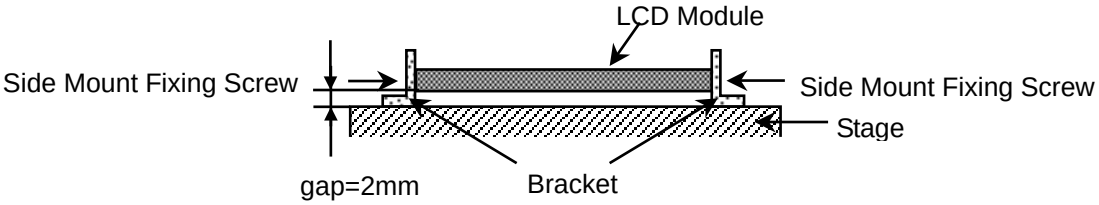

Note (5) At testing Vibration and Shock, the fixture in holding the module has to be hard and rigid enough so that the module would not be twisted or bent by the fixture.

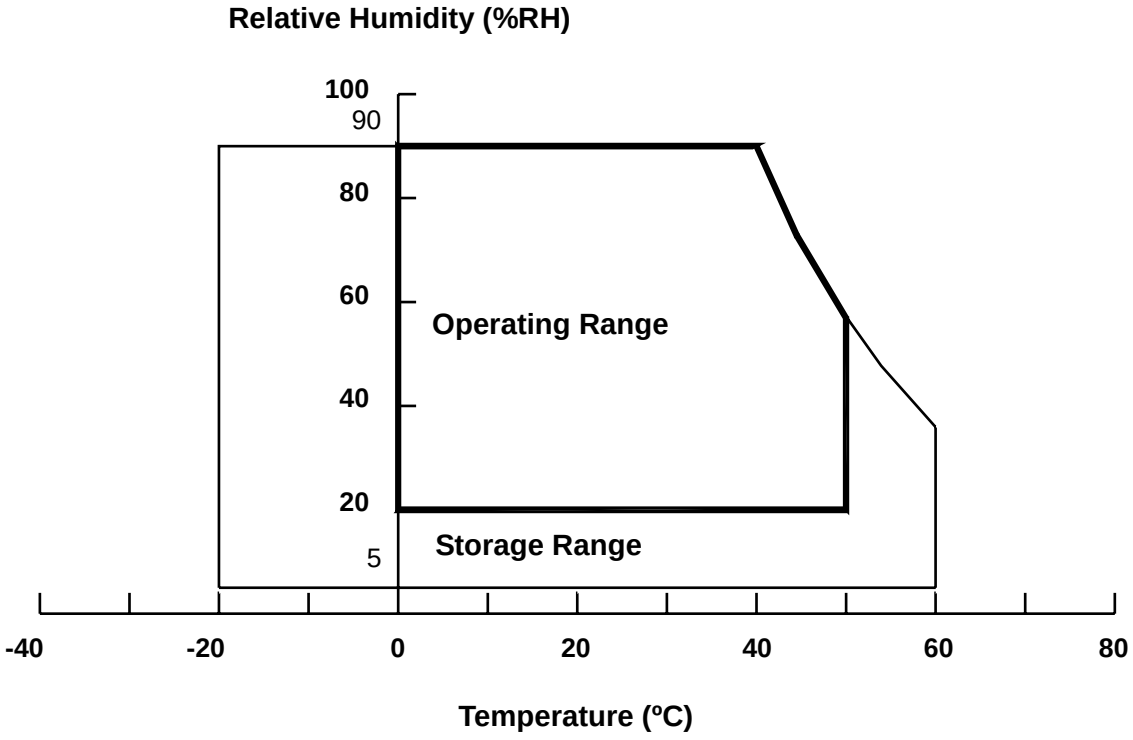

2.2.1 TFT LCD MODULE

Item	Symbol	Value		Unit	Note
		Min.	Max.		
Power Supply Voltage	V_{CC}	-0.3	+4.0	V	(1)
Logic Input Voltage	V_{IN}	-0.3	V_{CC}+0.3	V	

2.2.2 BACKLIGHT UNIT

Item	Symbol	Value		Unit	Note
		Min.	Max.		
Lamp Voltage	V_L	-	2.5K	V_{RMS}	(1), (2), I_L = 6.5 mA
Lamp Current	I_L	-	7.5	mA_{RMS}	(1), (2)
Lamp Frequency	F_L	-	80	KHz	

Note (1) Permanent damage to the device may occur if maximum values are exceeded. Function operation should be restricted to the conditions described under Normal Operating Conditions.

Note (2) Specified values are for lamp (Refer to 3.2 for further information).

3. ELECTRICAL CHARACTERISTICS

3.1 TFT LCD MODULE

Ta = 25 ± 2 ºC

Parameter		Symbol	Value			Unit	Note
			Min.	Typ.	Max.		
Power Supply Voltage		Vcc	3.0	3.3	3.6	V	-
Ripple Voltage		V_{RP}	-	50	-	mV	-
Rush Current		I_{RUSH}	-	1.2	1.5	A	(2)
Power Supply Current	White	Icc	-	300	-	mA	(3)a
	Black		-	400	-	mA	(3)b
Logical Input Voltage	"H" Level	V_{IL}	-	-	+100	mV	-
	"L" Level	V_{IH}	-100	-	-	mV	-
Terminating Resistor		R_T	-	100	-	Ohm	-

Note (1) The module should be always operated within above ranges.

Note (2) Measurement Conditions:

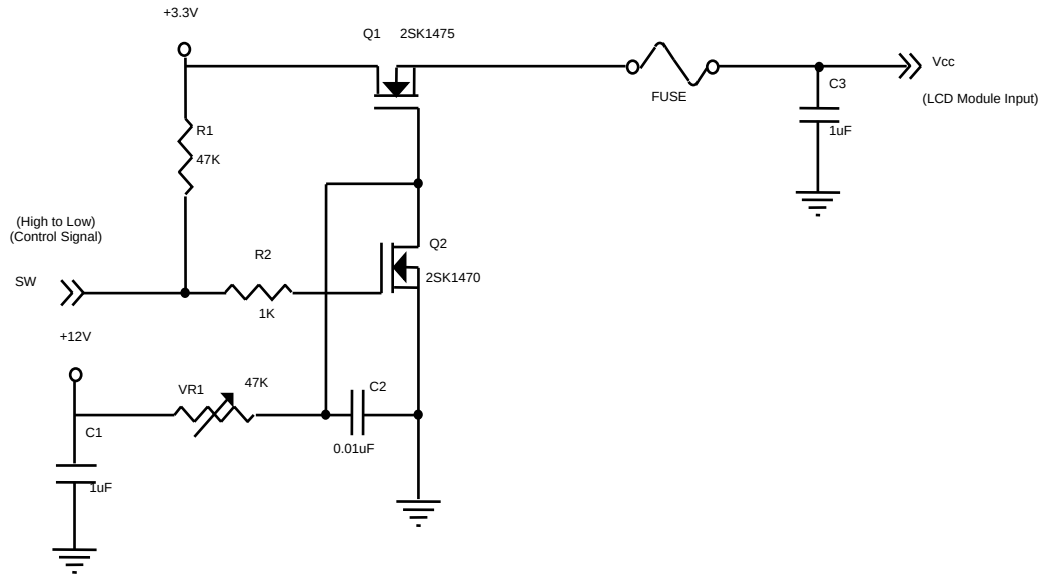

Vcc rising time is 470us

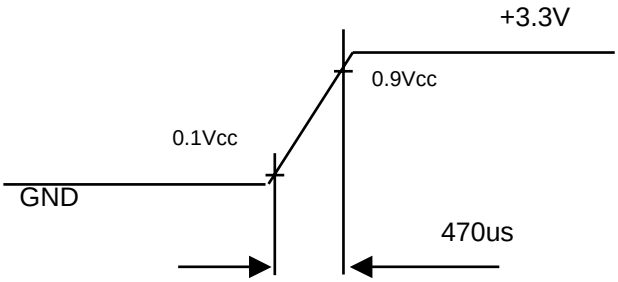

Note (3) The specified power supply current is under the conditions at Vcc = 3.3 V, Ta = 25 ± 2 ºC, f_v = 60 Hz, whereas a power dissipation check pattern below is displayed.

a. White Pattern

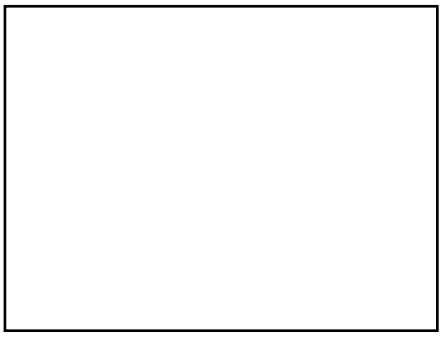

Active Area

b. Black Pattern

Active Area

3.2 BACKLIGHT UNIT

Ta = 25 ± 2 ºC

Parameter	Symbol	Value			Unit	Note
		Min.	Typ.	Max.		
Lamp Input Voltage	V_L	608	675	743	V_{RMS}	I_L = 6.5 mA
Lamp Current	I_L	2.0	-	6.5	mA_{RMS}	(1)
Lamp Turn On Voltage	V_S	-		1360 (25 °C)	V_{RMS}	(2)
		-		1500 (0 °C)	V_{RMS}	(2)
Operating Frequency	F_L	40	50	67	KHz	(3)
Lamp Life Time	L_{BL}	10,000		-	Hrs	(5)
Power Consumption	P_L	-	4.4	-	W	(4), I_L = 6.5 mA

Note (1) Lamp current is measured by utilizing a high frequency current meter as shown below:

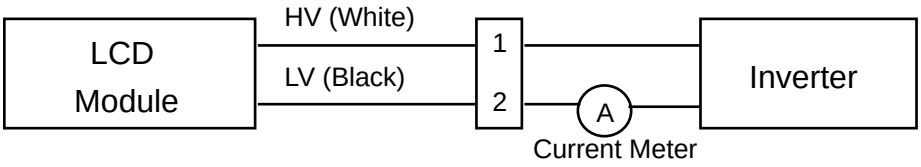

Note (2) The voltage shown above should be applied to the lamp for more than 1 second after startup. Otherwise the lamp may not be turned on.

Note (3) The lamp frequency may produce interference with horizontal synchronous frequency from the display, and this may cause line flow on the display. In order to avoid interference, the lamp frequency should be detached from the horizontal synchronous frequency and its harmonics as far as possible.

Note (4) $P_L = I_L \times V_L$

Note (5) The lifetime of lamp can be defined as the time in which it continues to operate under the condition Ta = 25 ±2 °C and I_L = 6.5 mArms until one of the following events occurs:

(a) When the brightness becomes or lower than 50% of its original value.

(b) When the effective ignition length becomes or lower than 80% of its original value. (Effective ignition length is defined as an area that has less than 70% brightness compared to the brightness in the center point.)

Note (6) The waveform of the voltage output of inverter must be area-symmetric and the design of the inverter must have specifications for the modularized lamp. The performance of the Backlight, such as lifetime or brightness, is greatly influenced by the characteristics of the DC-AC inverter for the lamp. All the parameters of an inverter should be carefully designed to avoid producing too much current leakage from high voltage output of the inverter. When designing or ordering the inverter please make sure that a poor lighting caused by the mismatch of the Backlight and the inverter (miss-lighting, flicker, etc.) never occurs. If the above situation is confirmed, the module should be operated in the same manners when it is installed in your instrument.

4. BLOCK DIAGRAM

4.1 TFT LCD MODULE

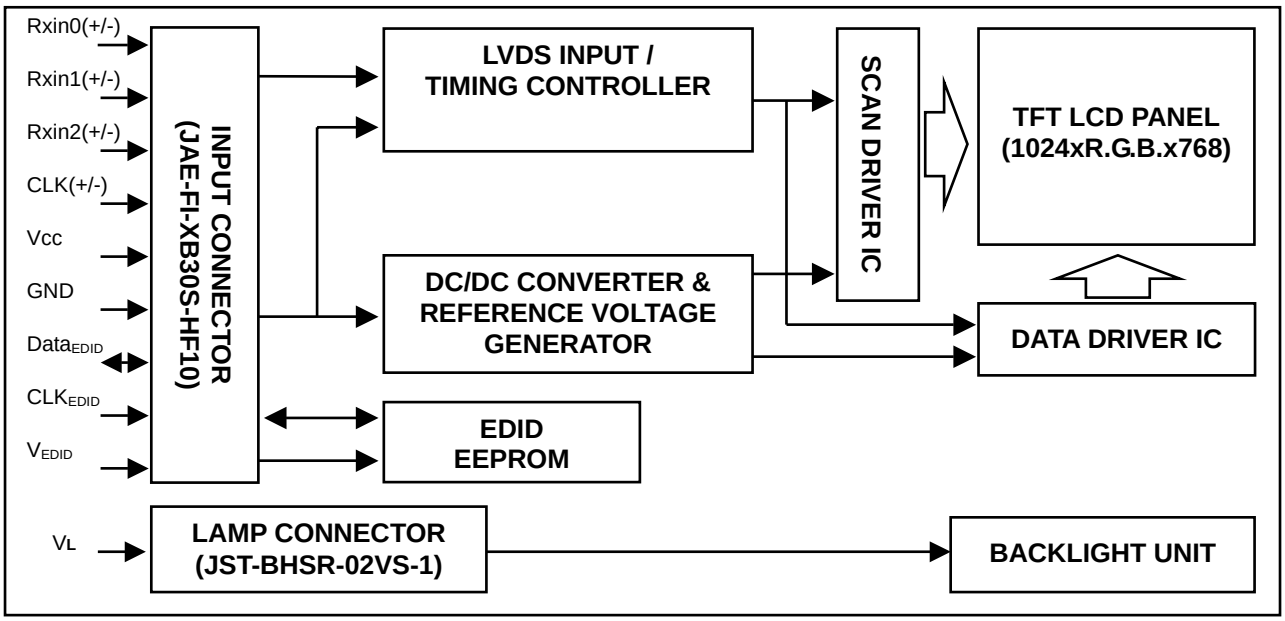

4.2 BACKLIGHT UNIT

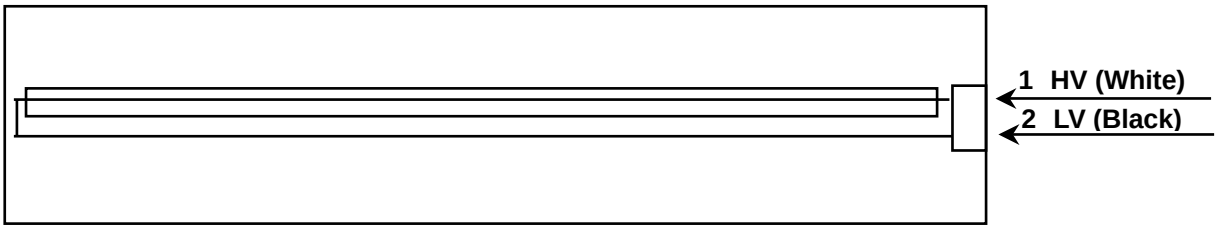

5. INPUT TERMINAL PIN ASSIGNMENT

5.1 TFT LCD MODULE

Pin	Symbol	Description	Polarity	Remark
1	Vss	Ground		
2	Vcc	Power Supply +3.3 V (typical)		
3	Vcc	Power Supply +3.3 V (typical)		
4	V_{EDID}	DDC 3.3V Power		DDC 3.3V Power
5	NC	Non-Connection		
6	CLK_{EDID}	DDC Clock		DDC Clock
7	$DATA_{EDID}$	DDC Data		DDC Data
8	Rxin0-	LVDS Differential Data Input	Negative	R0~R5,G0
9	Rxin0+	LVDS Differential Data Input	Positive	-
10	Vss	Ground		
11	Rxin1-	LVDS Differential Data Input	Negative	G1~G5, B0, B1
12	Rxin1+	LVDS Differential Data Input	Positive	-
13	Vss	Ground		
14	Rxin2-	LVDS Differential Data Input	Negative	B2~B5, DE, Hsync, Vsync

15	Rxin2+	LVDS Differential Data Input	Positive	
16	Vss	Ground		
17	CLK-	LVDS Clock Data Input	Negative	LVDS Level Clock
18	CLK+	LVDS Clock Data Input	Positive	
19	Vss	Ground		
20	NC	Non-Connection		
21	NC	Non-Connection		
22	Vss	Ground		
23	NC	Non-Connection		
24	NC	Non-Connection		
25	Vss	Ground		
26	NC	Non-Connection		
27	NC	Non-Connection		
28	Vss	Ground		
29	NC	Non-Connection		
30	NC	Non-Connection		

Note (1) Connector Part No.: JAE-FI-XB30S-HF10 or equivalent

Note (2) User's connector Part No: FI-X30M or equivalent

Note (3) The first pixel is even.

5.2 BACKLIGHT UNIT

Pin	Symbol	Description	Color
1	HV	High Voltage	White
2	LV	Ground	Black

Note (1) Connector Part No.: JST- BHSR-02VS-1 or equivalent

Note (2) User's connector Part No.: SM02B-BHSS-1-TB or equivalent

5.3 TIMING DIAGRAM OF LVDS INPUT SIGNAL

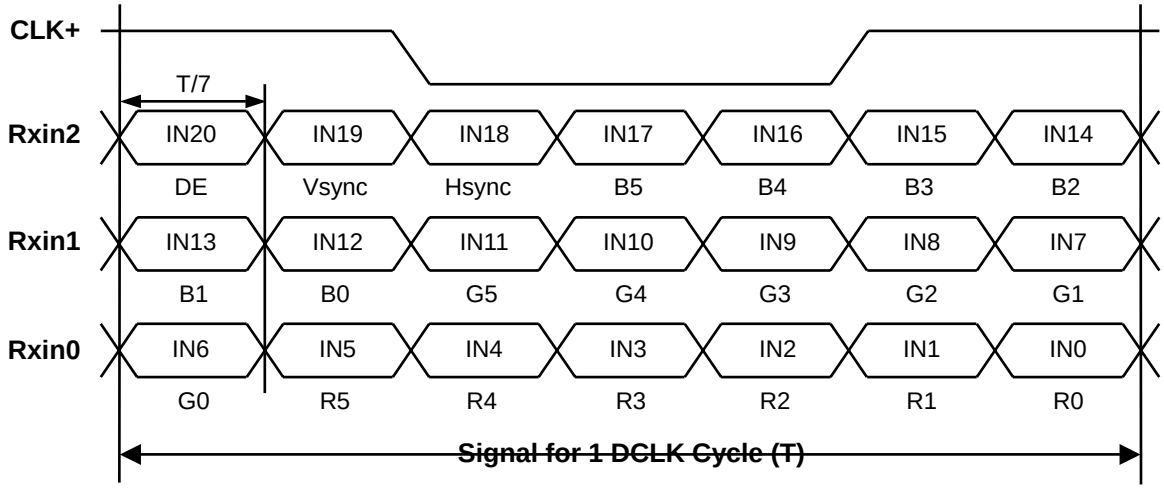

5.4 COLOR DATA INPUT ASSIGNMENT

The brightness of each primary color (red, green and blue) is based on the 6-bit gray scale data input for the color. The higher the binary input, the brighter the color. The table below provides the assignment of color versus data input.

Color		Data Signal																	
		Red						Green						Blue					
		R5	R4	R3	R2	R1	R0	G5	G4	G3	G2	G1	G0	B5	B4	B3	B2	B1	B0
	Black	0	0	0	0	0	0	0	0	0	0	0	0	0	0	0	0	0	0
	Red	1	1	1	1	1	1	0	0	0	0	0	0	0	0	0	0	0	0
	Green	0	0	0	0	0	0	1	1	1	1	1	1	0	0	0	0	0	0
Basic	Blue	0	0	0	0	0	0	0	0	0	0	0	0	1	1	1	1	1	1
Colors	Cyan	0	0	0	0	0	0	1	1	1	1	1	1	1	1	1	1	1	1
	Magenta	1	1	1	1	1	1	0	0	0	0	0	0	1	1	1	1	1	1
	Yellow	1	1	1	1	1	1	1	1	1	1	1	1	0	0	0	0	0	0
	White	1	1	1	1	1	1	1	1	1	1	1	1	1	1	1	1	1	1
	Red(0)/Dark	0	0	0	0	0	0	0	0	0	0	0	0	0	0	0	0	0	0
	Red(1)	0	0	0	0	0	1	0	0	0	0	0	0	0	0	0	0	0	0
Gray	Red(2)	0	0	0	0	1	0	0	0	0	0	0	0	0	0	0	0	0	0
Scale	:	:	:	:	:	:	:	:	:	:	:	:	:	:	:	:	:	:	:
Of	:	:	:	:	:	:	:	:	:	:	:	:	:	:	:	:	:	:	:
Red	Red(61)	1	1	1	1	0	1	0	0	0	0	0	0	0	0	0	0	0	0
	Red(62)	1	1	1	1	1	0	0	0	0	0	0	0	0	0	0	0	0	0
	Red(63)	1	1	1	1	1	1	0	0	0	0	0	0	0	0	0	0	0	0
	Green(0)/Dark	0	0	0	0	0	0	0	0	0	0	0	0	0	0	0	0	0	0
	Green(1)	0	0	0	0	0	0	0	0	0	0	0	1	0	0	0	0	0	0
Gray	Green(2)	0	0	0	0	0	0	0	0	0	0	1	0	0	0	0	0	0	0
Scale	:	:	:	:	:	:	:	:	:	:	:	:	:	:	:	:	:	:	:
Of	:	:	:	:	:	:	:	:	:	:	:	:	:	:	:	:	:	:	:
Green	Green(61)	0	0	0	0	0	0	1	1	1	1	0	1	0	0	0	0	0	0
	Green(62)	0	0	0	0	0	0	1	1	1	1	1	0	0	0	0	0	0	0
	Green(63)	0	0	0	0	0	0	1	1	1	1	1	1	0	0	0	0	0	0
	Blue(0)/Dark	0	0	0	0	0	0	0	0	0	0	0	0	0	0	0	0	0	0
	Blue(1)	0	0	0	0	0	0	0	0	0	0	0	0	0	0	0	0	0	1
Gray	Blue(2)	0	0	0	0	0	0	0	0	0	0	0	0	0	0	0	0	1	0
Scale	:	:	:	:	:	:	:	:	:	:	:	:	:	:	:	:	:	:	:
Of	:	:	:	:	:	:	:	:	:	:	:	:	:	:	:	:	:	:	:
Blue	Blue(61)	0	0	0	0	0	0	0	0	0	0	0	0	1	1	1	1	0	1
	Blue(62)	0	0	0	0	0	0	0	0	0	0	0	0	1	1	1	1	1	0
	Blue(63)	0	0	0	0	0	0	0	0	0	0	0	0	1	1	1	1	1	1

Note (1) 0: Low Level Voltage, 1: High Level Voltage

6. INTERFACE TIMING

6.1 INPUT SIGNAL TIMING SPECIFICATIONS

The specifications of input signal timing are as the following table and timing diagram**.**

Signal	Item	Symbol	Min.	Typ.	Max.	Unit	Note
DCLK	Frequency	1/Tc	50	65	68	MHz	-
DE	Vertical Total Time	TV	771	806	850	TH	-
	Vertical Addressing Time	TVD	768	768	768	TH	-
	Horizontal Total Time	TH	1200	1344	1500	Tc	-
	Horizontal Addressing Time	THD	1024	1024	1024	Tc	-

INPUT SIGNAL TIMING DIAGRAM

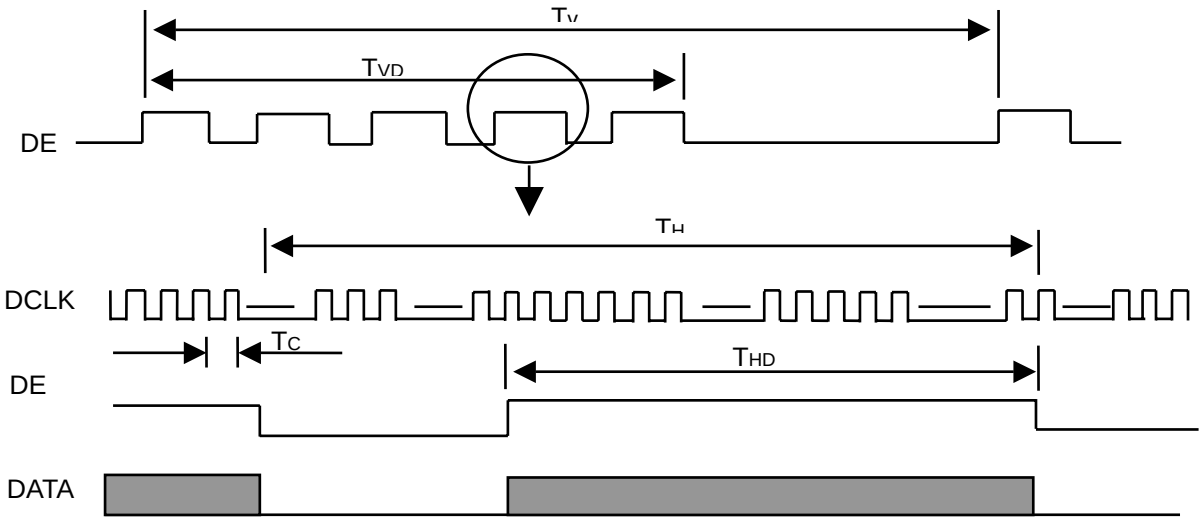

6.2 POWER ON/OFF SEQUENCE

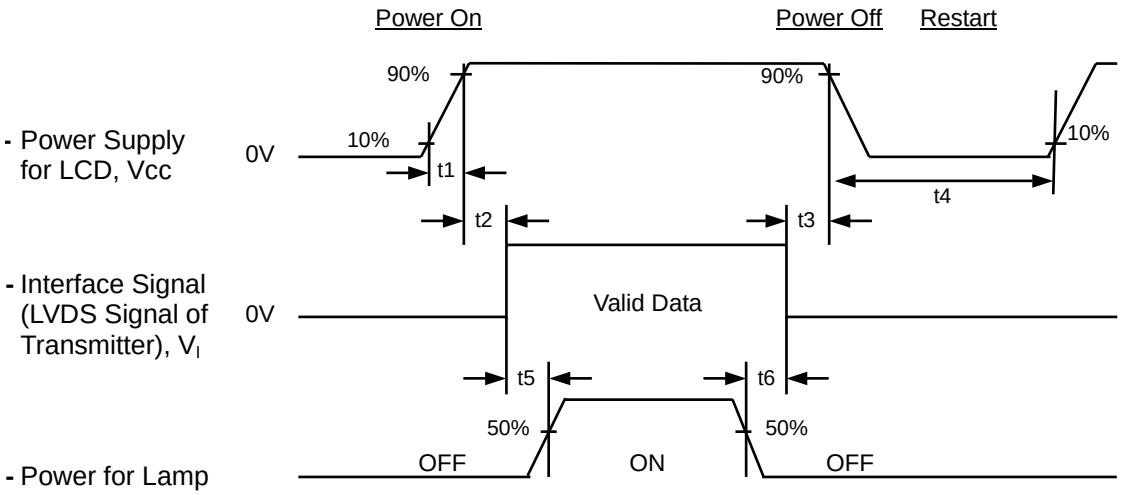

Timing Specifications:

0 < t1 ≦ 10 msec

0 < t2 ≦ 50 msec

0 < t3 ≦ 50 msec

t4 ≧ 500 msec

t5 ≧ 200 msec

t6 ≧ 200 msec

Note (1) Please avoid floating state of interface signal at invalid period.

Note (2) When the interface signal is invalid, be sure to pull down the power supply of LCD Vcc to 0 V.

Note (3) The Backlight inverter power must be turned on after the power supply for the logic and the interface signal is valid. The Backlight inverter power must be turned off before the power supply for the logic and the interface signal is invalid.

7. OPTICAL CHARACTERISTICS

7.1 TEST CONDITIONS

Item	Symbol	Value	Unit
Ambient Temperature	Ta	25±2	°C
Ambient Humidity	Ha	50±10	%RH
Supply Voltage	V_{CC}	3.3	V
Input Signal	According to typical value in "3. ELECTRICAL CHARACTERISTICS"		
Inverter Current	I_L	6.5	mA
Inverter Driving Frequency	F_L	50	KHz
Inverter	H05-4915		

The relative measurement methods of optical characteristics are shown in 6.2. The following items should be measured under the test conditions described in 6.1 and stable environment shown in Note (6).

7.2 OPTICAL SPECIFICATIONS

Item		Symbol	Condition	Min.	Typ.	Max.	Unit	Note
Contrast Ratio		CR	θ_x=0°, θ_Y =0° Viewing Normal Angle	200	250	-	-	(2), (6)
Response Time		T_R		-	6	10	ms	(3)
		T_F		-	17	25	ms	
Average Luminance of White		L_{AVE}		140	170	-	cd/m^2	(4), (6)
White Variation		δW		-	-	1.4	-	(6), (7)
Cross Talk		CT		-	-	3.0	%	(5), (6)
Color Chromaticity	Red	Rx		0.570	0.600	0.630	-	(1), (6)
		Ry		0.313	0.343	0.373	-	
	Green	Gx		0.294	0.324	0.354	-	
		Gy		0.506	0.536	0.566	-	
	Blue	Bx		0.122	0.152	0.182	-	
		By		0.102	0.132	0.162	-	
	White	Wx		0.283	0.313	0.343	-	
		Wy		0.299	0.329	0.359	-	
Viewing Angle	Horizontal	θ_x+	CR≥10	40	45		Deg.	
		θ_x-		40	45			
	Vertical	θ_Y+		10	15			
		θ_Y-		30	35			

Note (1) Definition of Viewing Angle (θx, θy):

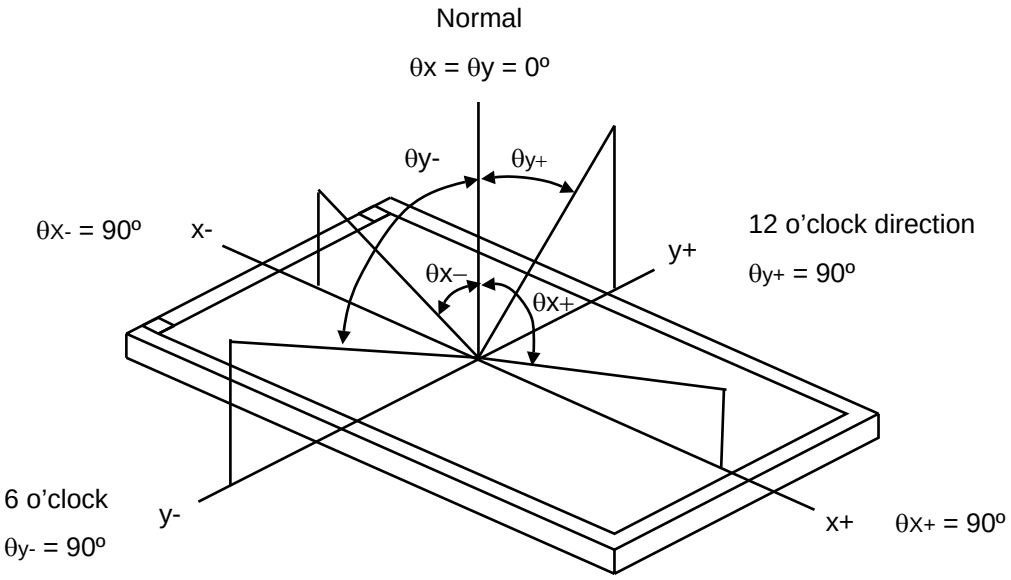

Note (2) Definition of Contrast Ratio (CR):

The contrast ratio can be calculated by the following expression.

Contrast Ratio (CR) = L63 / L0

L63: Luminance of gray level 63

L 0: Luminance of gray level 0

CR = CR (5)

CR (X) is corresponding to the Contrast Ratio of the point X at Figure in Note (7).

Note (3) Definition of Response Time (T_R, T_F):

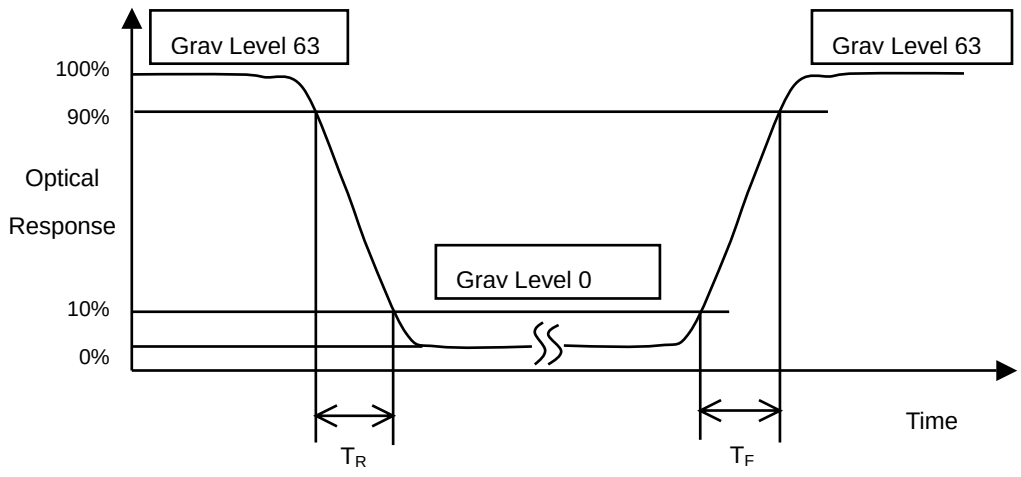

Note (4) Definition of Average Luminance of White (L_{AVE}):

Measure the luminance of gray level 63 at 5 points

L_{AVE} = [L (1)+ L (2)+ L (3)+ L (4)+ L (5)] / 5

L (x) is corresponding to the luminance of the point X at Figure in Note (7).

Note (5) Definition of Cross Talk (CT):

$CT = | Y_B – Y_A | / Y_A \times 100$ (%)

Where:

Y_A = Luminance of measured location without gray level 0 pattern (cd/m^2)

Y_B = Luminance of measured location with gray level 0 pattern (cd/m^2)

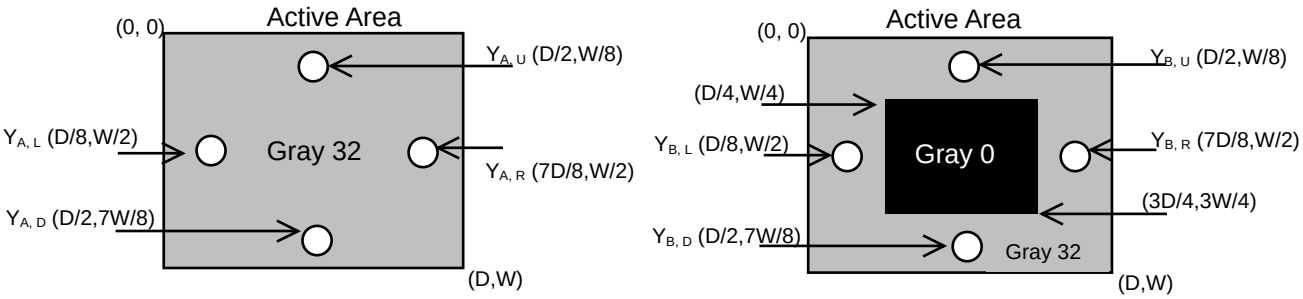

Note (6) Measurement Setup:

The LCD module should be stabilized at given temperature for 20 minutes to avoid abrupt temperature change during measuring. In order to stabilize the luminance, the measurement should be executed after lighting Backlight for 20 minutes in a windless room.

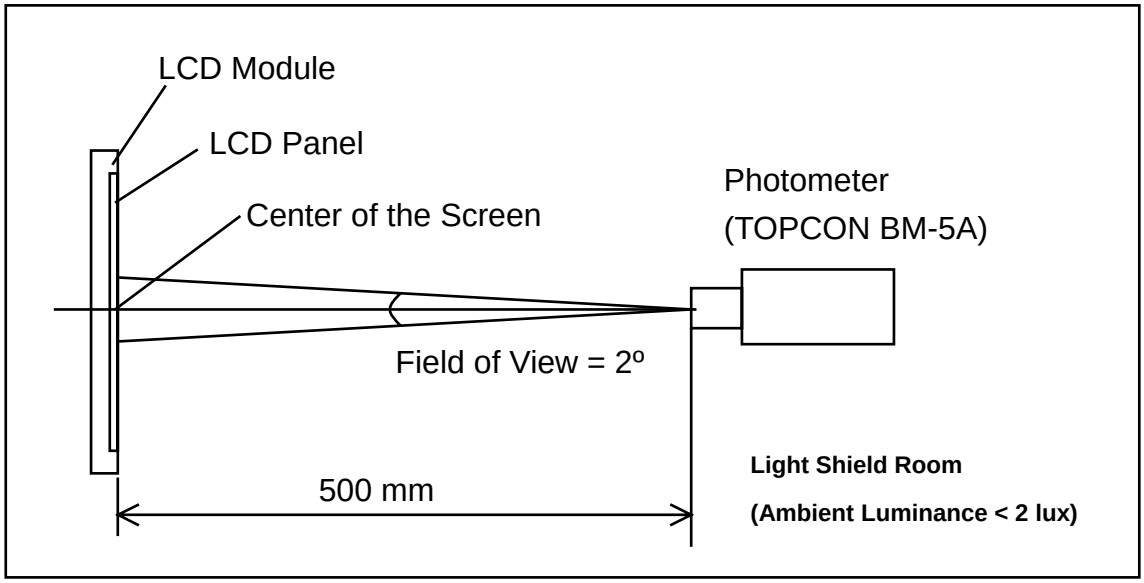

Note (7) Definition of White Variation (δW):

Measure the luminance of gray level 63 at 5 points

δW = Maximum [L (1), L (2), L (3), L (4), L (5)] / Minimum [L (1), L (2), L (3), L (4), L (5)]

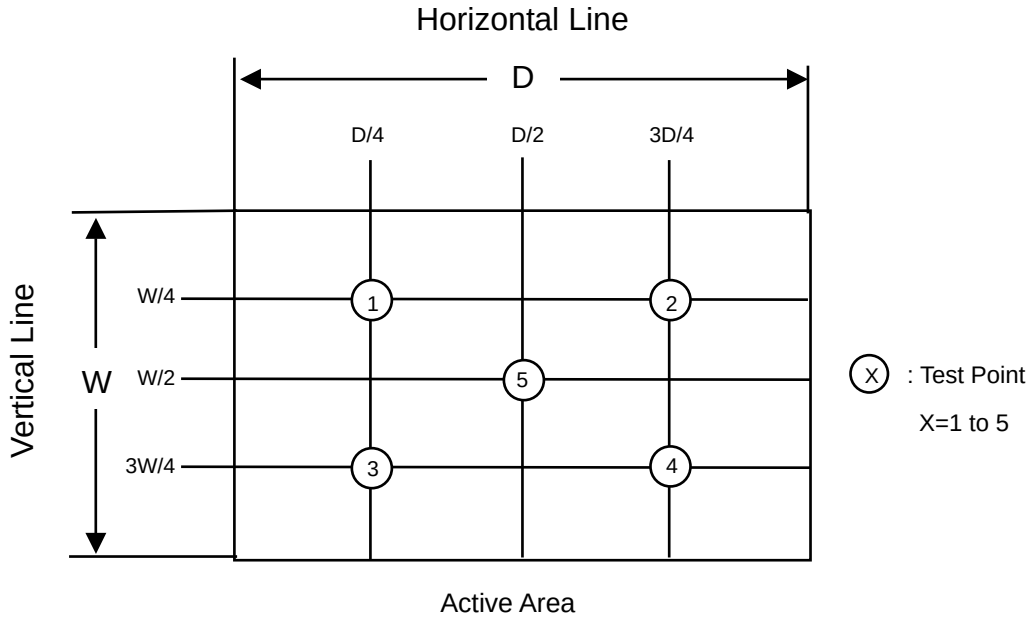

8. PRECAUTIONS

8.1 ASSEMBLY AND HANDLING PRECAUTIONS

(1) Do not apply rough force such as bending or twisting to the module during assembly.

(2) To assemble or install module into user's system can be only in clean working areas. The dust and oil may cause electrical short or worsen the polarizer.

(3) It's not permitted to have pressure or impulse on the module because the LCD panel and Backlight will be damaged.

(4) Always follow the correct power sequence when LCD module is connecting and operating. This can prevent damage to the CMOS LSI chips during latch-up.

(5) Do not pull the I/F connector in or out while the module is operating.

(6) Do not disassemble the module.

(7) Use a soft dry cloth without chemicals for cleaning, because the surface of polarizer is very soft and easily scratched.

(8) It is dangerous that moisture come into or contacted the LCD module, because moisture may damage LCD module when it is operating.

(9) High temperature or humidity may reduce the performance of module. Please store LCD module within the specified storage conditions.

(10) When ambient temperature is lower than 10ºC may reduce the display quality. For example, the response time will become slowly, and the starting voltage of CCFL will be higher than room temperature.

8.2 SAFETY PRECAUTIONS

(1) The startup voltage of Backlight is approximately 1000 Volts. It may cause electrical shock while assembling with inverter. Do not disassemble the module or insert anything into the Backlight unit.

(2) If the liquid crystal material leaks from the panel, it should be kept away from the eyes or mouth. In case of contact with hands, skin or clothes, it has to be washed away thoroughly with soap.

(3) After the module's end of life, it is not harmful in case of normal operation and storage.

9. DEFINITION OF LABELS

9.1 CMO MODULE LABEL

The barcode nameplate is pasted on each module as illustration, and its definitions are as following explanation.

(a) Model Name: N150X3 - L05

(b) Revision: Rev. XX: ES : A1, A2, A3,…, etc.

CS & MP : C1, C2, C3,…,etc.

Note: It will happen that revision code changed without product changed in developing duration because of CMO internal stage change, for example: AX → B1, BX → C1.

(c) Serial ID: X X X X X X Y M D L N N N N

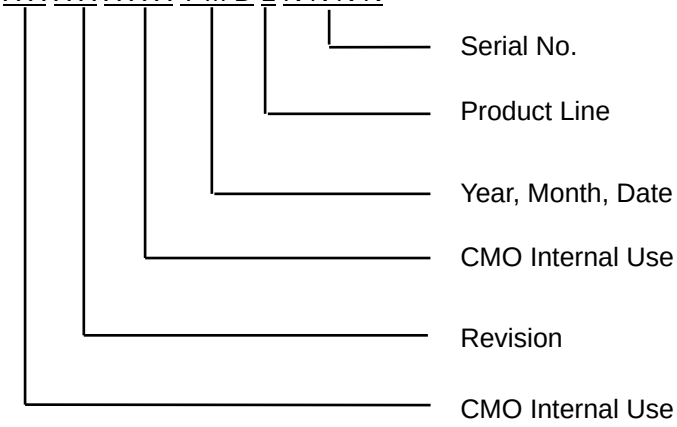

Serial ID includes the information as below:

(a) Manufactured Date: Year: 0 ~ 9, for 2000 ~ 2009.

Month: 1 ~ 9, A ~ C, for Jan. ~ Dec.

Day: 1 ~ 9, A ~ Y, for 1st to 31st, exclude I, O and U.

(b) Revision Code: cover all the changes.

(c) Serial No.: Manufacturing sequence of product.

(d) Product Line: 1 -> Line1, 2 -> Line 2, …etc.

9.2 CMO CARTON LABEL

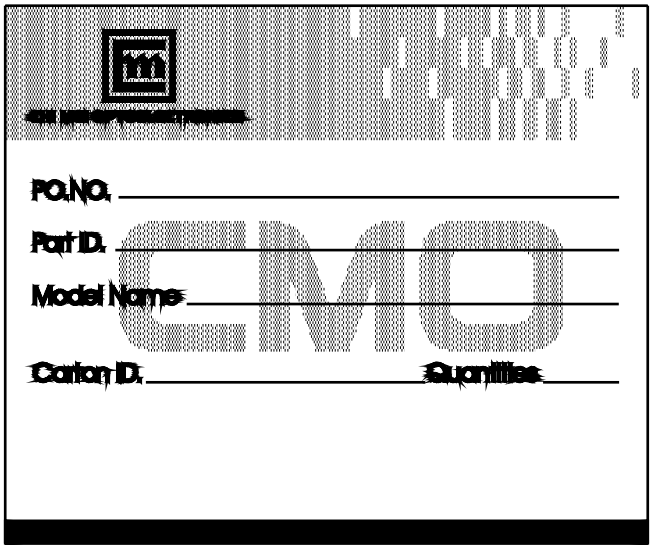

10. PACKAGING

10.1 PACKING SPECIFICATIONS

(1) 10 LCD modules / 1 Box

(2) Box dimensions : 422(L) X 337(W) X 345(H) mm

(3) Weight : approximately 6.5Kg (10 modules per box)

10.2 PACKING METHOD

(1)Carton Packing should have no failure in the following reliability test items.

Test Item	Test Conditions	Note
Vibration	Random, 2-200 Hz, follow ISTA standard	Non Operation
Dropping Test	1 Angle, 3 Edge, 6 Face, 60cm	Non Operation

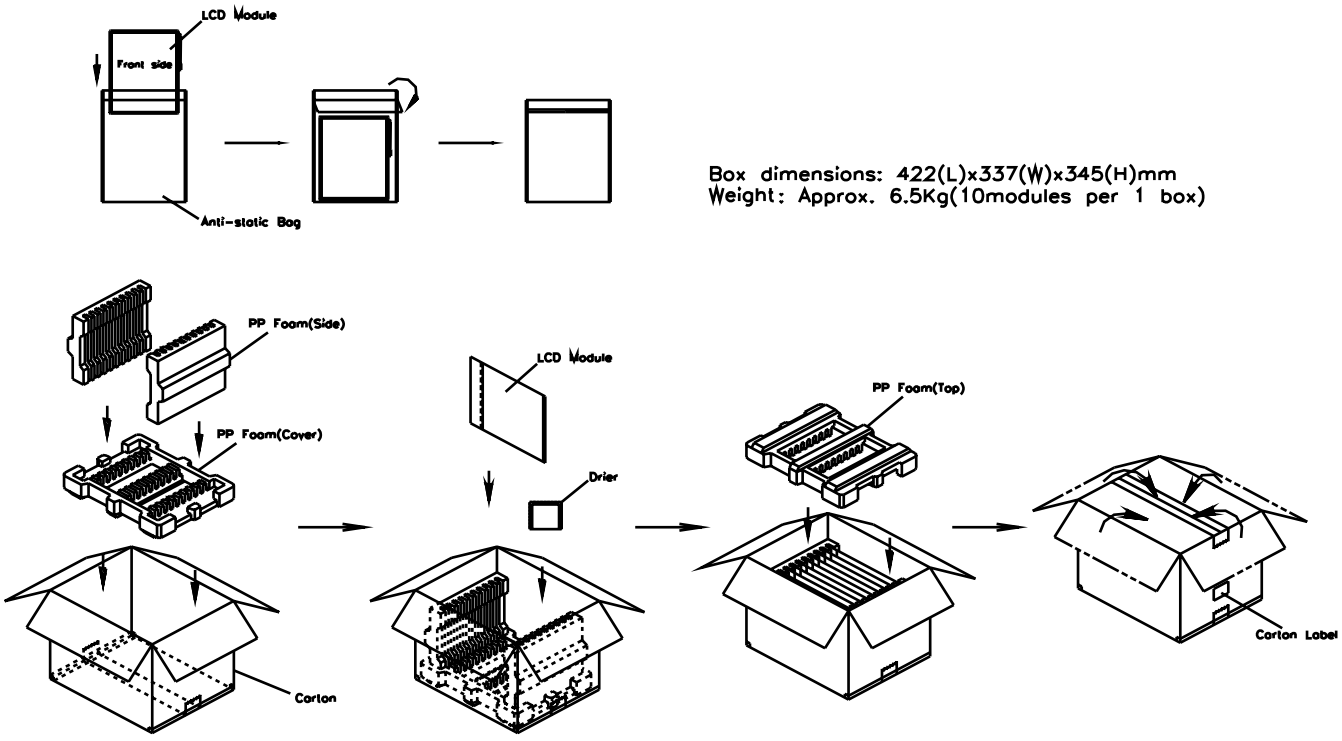

Figure. 10-1 Packing method

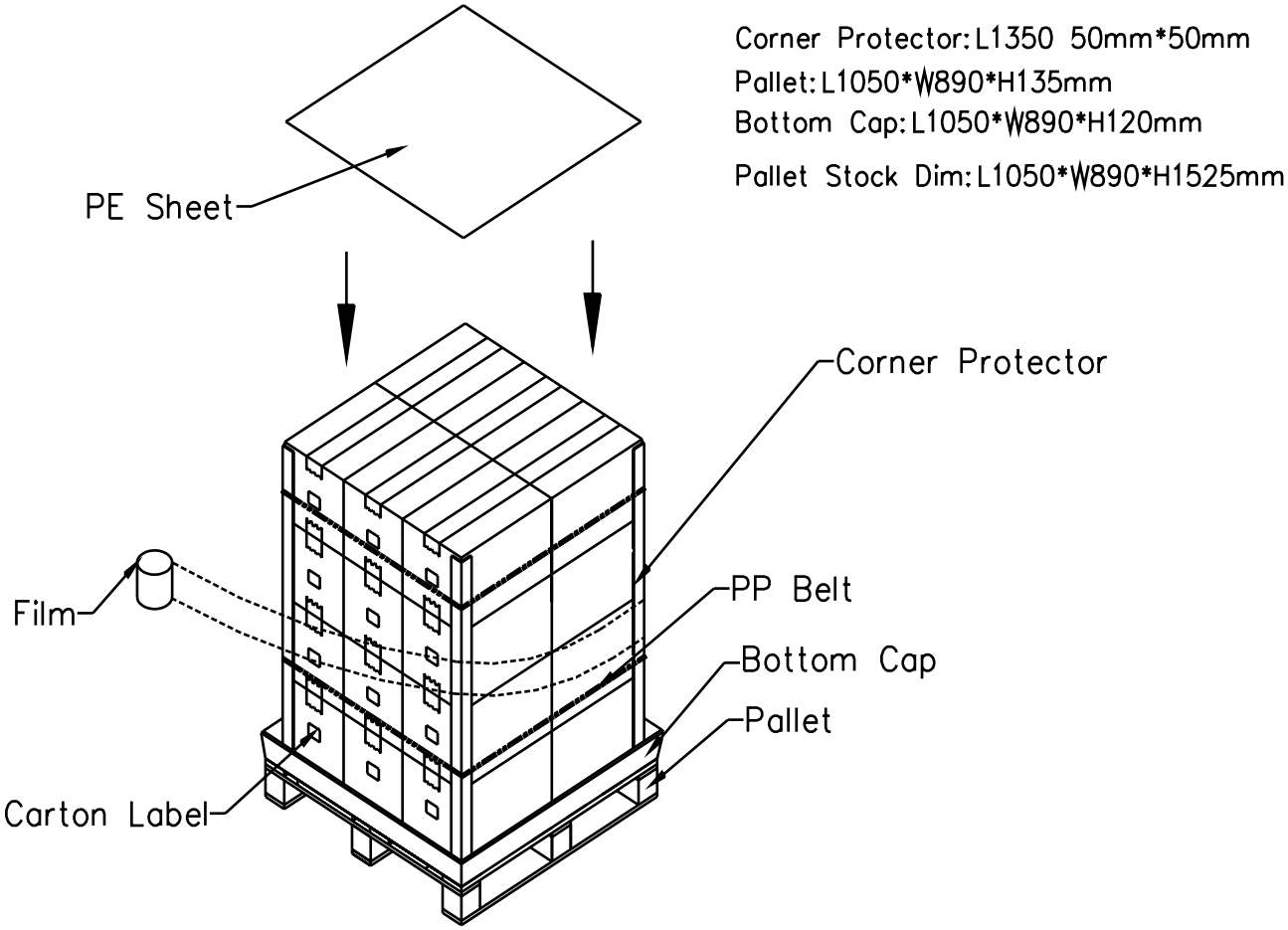

Figure. 10-2 Packing method