Doc. Number:

☐ Tentative Specification
☐ Preliminary Specification
■ Approval Specification

MODEL NO.: N133BGE
SUFFIX: E31

Customer:

APPROVED BY **SIGNATURE**

Name / Title _____ _____

Note：

Please return 1 copy for your confirmation with your signature and comments.

Approved By	Checked By	Prepared By

The copyright belongs to InnoLux. Any unauthorized use is prohibited.

CONTENTS

1. GENERAL DESCRIPTION 3
1.1 OVERVIEW 3
1.2 GENERAL SPECIFICATI0NS 3
2. MECHANICAL SPECIFICATIONS 3
2.1 CONNECTOR TYPE 3
3. ABSOLUTE MAXIMUM RATINGS 3
3.1 ABSOLUTE RATINGS OF ENVIRONMENT 3
3.2 ELECTRICAL ABSOLUTE RATINGS 3
3.2.1 TFT LCD MODULE 3
4. ELECTRICAL SPECIFICATIONS 3
4.1 FUNCTION BLOCK DIAGRAM 3
4.2. INTERFACE CONNECTIONS 3
4.3 ELECTRICAL CHARACTERISTICS 3
4.3.1 LCD ELETRONICS SPECIFICATION 3
4.3.2 LED CONVERTER SPECIFICATION 3
4.3.3 BACKLIGHT UNIT 3
4.4 DISPLAY PORT INPUT SIGNAL TIMING SPECIFICATIONS 3
4.4.1 DISPLAY PORT INTERFACE 3
4.4.2 COLOR DATA INPUT ASSIGNMENT 3
4.4.3 DISPLAY TIMING SPECIFICATIONS 3
4.5 POWER ON/OFF SEQUENCE 3
5. OPTICAL CHARACTERISTICS 3
5.1 TEST CONDITIONS 3
5.2 OPTICAL SPECIFICATIONS 3
6. RELIABILITY TEST ITEM 3
7. PACKING 3
7.1 MODULE LABEL 3
7.2 CARTON 3
7.3 PALLET 3
7.4 UN-PACKAGING METHOD 3
8. PRECAUTIONS 3
8. PRECAUTIONS 3
8.1 HANDLING PRECAUTIONS 3
8.2 STORAGE PRECAUTIONS 3
8.3 OPERATION PRECAUTIONS 3
Appendix. EDID DATA STRUCTURE 3
Appendix. OUTLINE DRAWING 3

The copyright belongs to InnoLux. Any unauthorized use is prohibited.

Appendix. SYSTEM COVER DESIGN NOTICE Ver.3 3
Appendix. LCD MODULE HANDLING MANUAL 3

The copyright belongs to InnoLux. Any unauthorized use is prohibited.

REVISION HISTORY

Version	Date	Page	Description
3.0	Nov.27,2013	All	Approval spec ver. 3.0 was first issued.

The copyright belongs to InnoLux. Any unauthorized use is prohibited.

1. GENERAL DESCRIPTION

1.1 OVERVIEW

N133BGE-E31 is a 13.3" (13.3" diagonal) TFT Liquid Crystal Display module with LED Backlight unit and 30 pins eDP interface. This module supports 1366 x 768 HD mode and can display 262,144 colors. The optimum viewing angle is at 6 o'clock direction.

1.2 GENERAL SPECIFICATI0NS

Item	Specification	Unit	Note
Screen Size	13.3 diagonal		
Driver Element	a-si TFT active matrix	-	-
Pixel Number	1366 x R.G.B. x 768	pixel	-
Pixel Pitch	0.2148 (H) x 0.2148 (V)	mm	-
Pixel Arrangement	RGB vertical stripe	-	-
Display Colors	262,144	color	-
Transmissive Mode	Normally white	-	-
Surface Treatment	Hard coating (3H), Anti-Glare	-	-
Color Gamma	45%	NTSC	typ
Luminance, White	200	Cd/m2	
Power Consumption	Total 2.95W (Max.) @ cell 0.85W (Max.), BL 2.1W (Max.)		(1)

Note (1) The specified power consumption (with converter efficiency) is under the conditions at VCCS = 3.3 V, fv = 60 Hz, LED_VCCS = Typ, fPWM = 200 Hz, Duty=100% and Ta = 25 ± 2 ºC, whereas BLACK pattern is displayed.

2. MECHANICAL SPECIFICATIONS

Item		Min.	Typ.	Max.	Unit	Note
Module Size	Horizontal (H)	305.8	306.3	306.8	mm	(1) (2)
	Vertical (V)	177.2	177.7	178.2	mm	
	Vertical (V) with PCB & Bracket	188.25	188.75	189.25	mm	
	Thickness (T)	NA	3.29	3.6	mm	
	Thickness (T) with PCB & Bracket	NA	NA	NA	mm	Slim Bend
Polarizer Area	Horizontal	296.57	296.82	297.07	mm	
	Vertical	168.17	168.37	168.57	mm	
Active Area	Horizontal	293.32	293.42	293.52	mm	
	Vertical	164.87	164.97	165.07	mm	
Weight		NA	265	280	g	

Note (1) Please refer to the attached drawings for more information of front and back outline dimensions.

Note (2) Dimensions are measured by caliper.

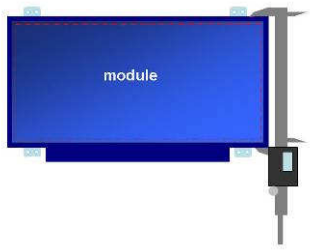

The copyright belongs to InnoLux. Any unauthorized use is prohibited.

2.1 CONNECTOR TYPE

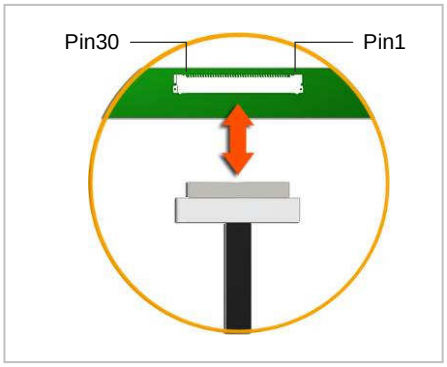

Please refer Appendix Outline Drawing for detail design.

Connector Part No.: IPEX-20455-030E-12

User's connector Part No: IPEX-20453-030T-01

3. ABSOLUTE MAXIMUM RATINGS

3.1 ABSOLUTE RATINGS OF ENVIRONMENT

Item	Symbol	Value		Unit	Note
		Min.	Max.		
Storage Temperature	T_{ST}	-20	+60	ºC	(1)
Operating Ambient Temperature	T_{OP}	0	+50	ºC	(1), (2)

Note (1) (a) 90 %RH Max. **(Ta < 40 ºC).**

(b) Wet-bulb temperature should be 39 ºC Max. **(Ta < 40 ºC).**

(c) No condensation.

Note (2) The temperature of panel surface should be 0 ºC min. and 60 ºC max.

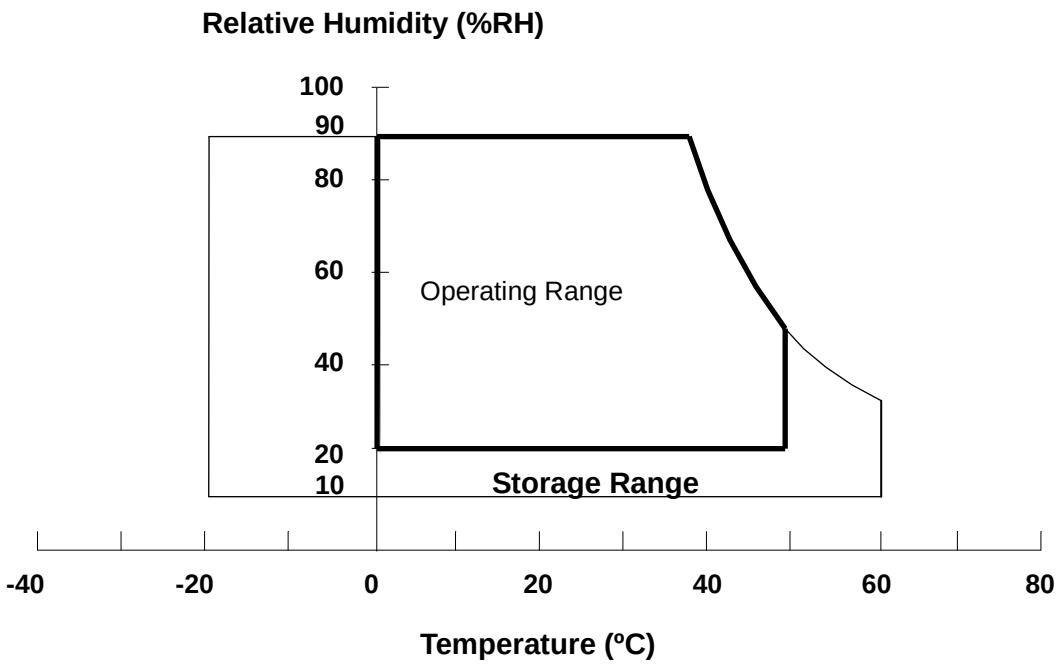

The copyright belongs to InnoLux. Any unauthorized use is prohibited.

3.2 ELECTRICAL ABSOLUTE RATINGS

3.2.1 TFT LCD MODULE

Item	Symbol	Value		Unit	Note
		Min.	Max.		
Power Supply Voltage	VCCS	-0.3	+4.0	V	(1)
Logic Input Voltage	V_{IN}	-0.3	VCCS+0.3	V	
Converter Input Voltage	LED_VCCS	-0.3	26	V	(1)
Converter Control Signal Voltage	LED_PWM,	-0.3	5	V	1)
Converter Control Signal Voltage	LED_EN	-0.3	5	V	(1)

Note (1) Stresses beyond those listed in above “ELECTRICAL ABSOLUTE RATINGS” may cause permanent damage to the device. Normal operation should be restricted to the conditions described in “ELECTRICAL CHARACTERISTICS”.

The copyright belongs to InnoLux. Any unauthorized use is prohibited.

4. ELECTRICAL SPECIFICATIONS

4.1 FUNCTION BLOCK DIAGRAM

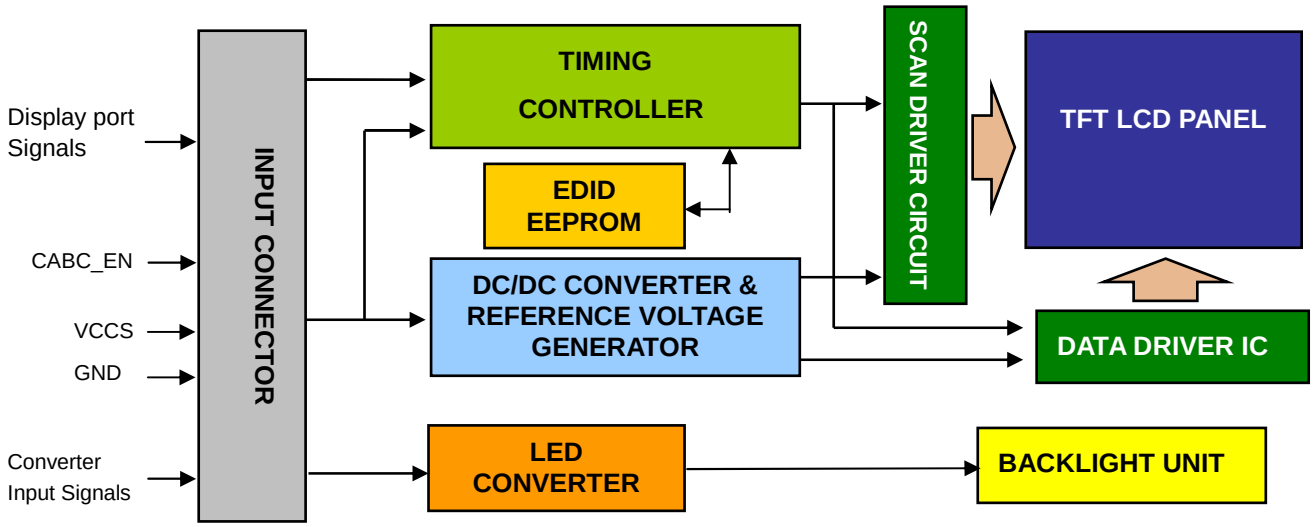

4.2. INTERFACE CONNECTIONS

Pin	Symbol	Description	Remark
1	CABC_EN	CABC Enable Input	
2	H_GND	High Speed Ground	
3	NC	No Connection (Reserved for LCD test)	
4	NC	No Connection (Reserved for LCD test)	
5	H_GND	High Speed Ground	
6	ML0-	Complement Signal-Lane 0	
7	ML0+	True Signal-Main Lane 0	
8	H_GND	High Speed Ground	
9	AUX+	True Signal-Auxiliary Channel	
10	AUX-	Complement Signal-Auxiliary Channel	
11	H_GND	High Speed Ground	
12	VCCS	Power Supply +3.3 V (typical)	
13	VCCS	Power Supply +3.3 V (typical)	
14	NC	No Connection (Reserved for LCD test)	
15	GND	Ground	
16	GND	Ground	
17	HPD	Hot Plug Detect	
18	BL_GND	BL Ground	
19	BL_GND	BL Ground	
20	BL_GND	BL Ground	
21	BL_GND	BL Ground	
22	LED_EN	BL_Enable Signal of LED Converter	
23	LED_PWM	PWM Dimming Control Signal of LED Converter	
24	NC	No Connection (Reserved for LCD test)	
25	NC	No Connection (Reserved for LCD test)	

The copyright belongs to InnoLux. Any unauthorized use is prohibited.

26	LED_VCCS	BL Power	(Support 5.0 ~ 21V)
27	LED_VCCS	BL Power	(Support 5.0 ~ 21V)
28	LED_VCCS	BL Power	(Support 5.0 ~ 21V)
29	LED_VCCS	BL Power	(Support 5.0 ~ 21V)
30	NC	No Connection (Reserved for LCD test)	

Note (1) The first pixel is odd as shown in the following figure.

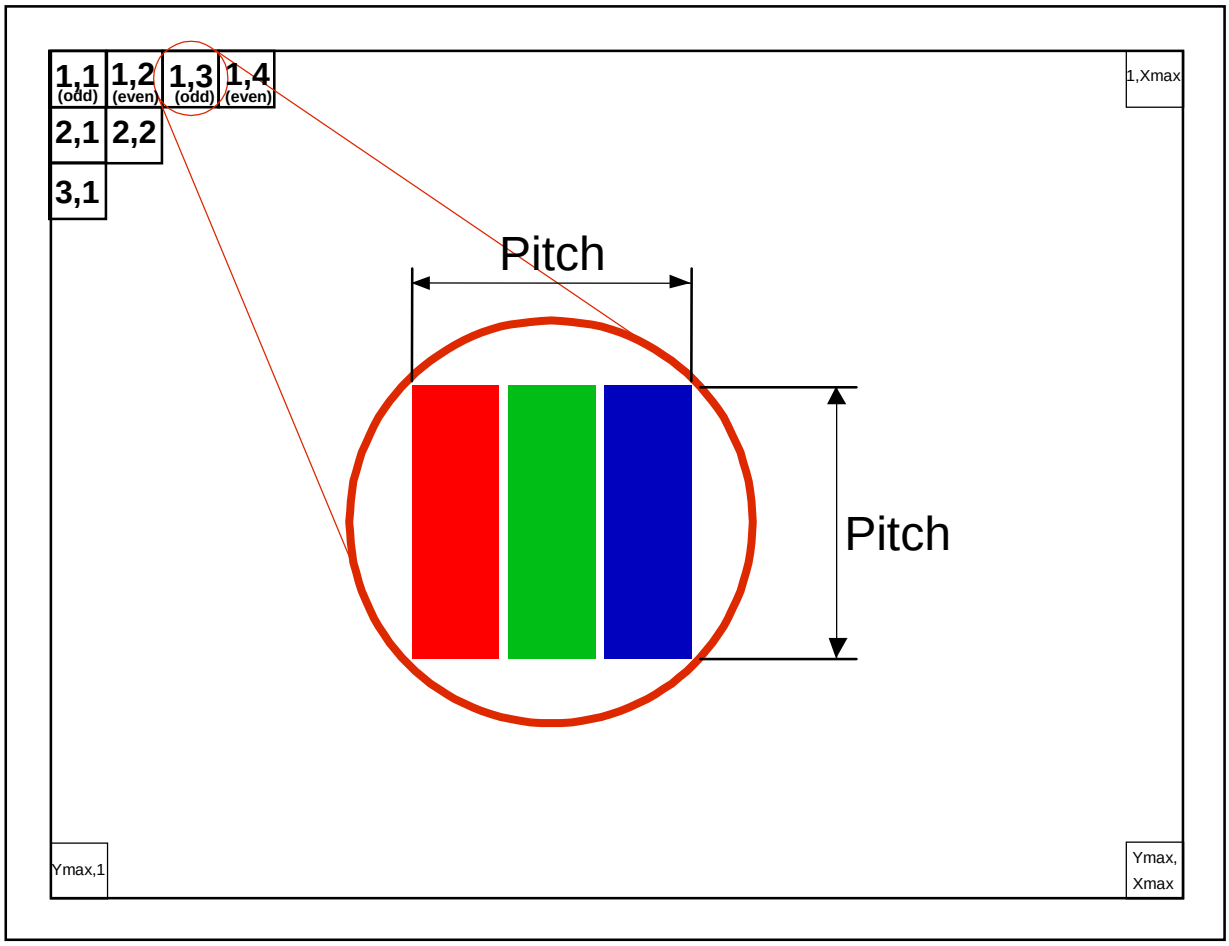

Note (2) The setting of CABC function are as follows.

Pin	Enable	Disable
CABC_EN	Hi	Lo or Open

Hi = High level, Lo = Low level.

The copyright belongs to InnoLux. Any unauthorized use is prohibited.

4.3 ELECTRICAL CHARACTERISTICS

4.3.1 LCD ELETRONICS SPECIFICATION

Parameter		Symbol	Value			Unit	Note
			Min.	Typ.	Max.		
Power Supply Voltage		VCCS	3.0	3.3	3.6	V	(1)-
HPD	High Level		2.25	-	2.75	V	
	Low Level		0	-	0.4	V	
Ripple Voltage		V_{RP}	-	50	-	mV	(1)-
CABC_EN Input Voltage	High Level	V_{IHCABC}	2.3	-	3.6	V	
	Low Level	V_{ILCABC}	0	-	0.5	V	
Inrush Current		I_{RUSH}	-	-	1.5	A	(1),(2)
Power Supply Current	Mosaic	Icc		210	225	mA	(3)a
	Black			230	255	mA	(3)
Power per EBL WG		P_{EBL}		1.32	-	W	(4)

Note (1) The ambient temperature is Ta = 25 ± 2 ºC.

Note (2) I_{RUSH}: the maximum current when VCCS is rising

I_{IS}: the maximum current of the first 100ms after power-on

Measurement Conditions: Shown as the following figure. Test pattern: black.

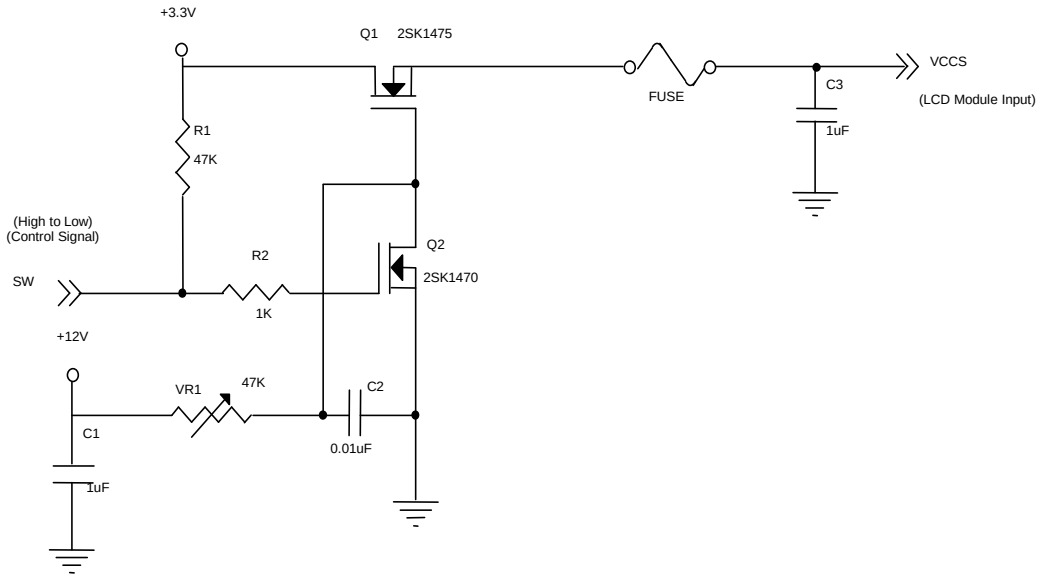

VCCS rising time is 0.5ms

The copyright belongs to InnoLux. Any unauthorized use is prohibited.

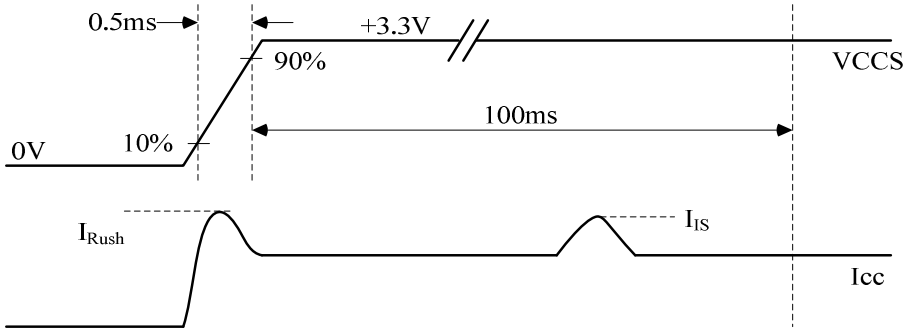

The copyright belongs to InnoLux. Any unauthorized use is prohibited.

Note (3) The specified power supply current is under the conditions at VCCS = 3.3 V, Ta = 25 ± 2 ºC, DC Current and f_v = 60 Hz, whereas a specified power dissipation check pattern is displayed

a. Mosaic Pattern

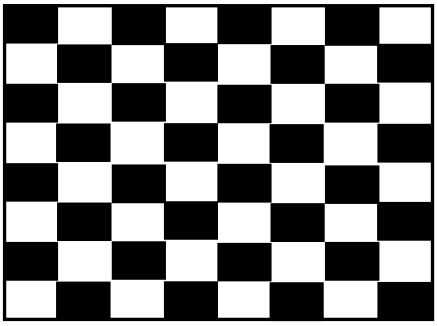

Active Area

Note (4) The specified power are the sum of LCD panel electronics input power and the converter input power. Test conditions are as follows.

(a) VCCS = 3.3 V, Ta = 25 ± 2 ºC, f_v = 60 Hz,

(b) The pattern used is a black and white 32 x 36 checkerboard, slide #100 from the VESA file "Flat Panel Display Monitor Setup Patterns", FPDMSU.ppt.

(c) Luminance: 60 nits

The copyright belongs to InnoLux. Any unauthorized use is prohibited.

4.3.2 LED CONVERTER SPECIFICATION

Parameter		Symbol	Value			Unit	Note
			Min.	Typ.	Max.		
Converter Input power supply voltage		LED_Vccs	5.0	12.0	21.0	V	
Converter Inrush Current		$ILED_{RUSH}$	-	-	1.5	A	(1)
EN Control Level	Backlight On		2.2	-	5.0	V	
	Backlight Off		0	-	0.6	V	
PWM Control Level	PWM High Level		2.2	-	5.0	V	
	PWM Low Level		0	-	0.6	V	
PWM Control Duty Ratio			5	-	100	%	
PWM Control Permissive Ripple Voltage		VPWM_pp	-	-	100	mV	
PWM Control Frequency		f_{PWM}	190	-	2K	Hz	(2)
LED Power Current	LED_VCCS =Typ.	ILED	139	167	181	mA.	(3)

Note (1) $ILED_{RUSH}$: the maximum current when LED_VCCS is rising,

$ILED_{IS}$: the maximum current of the first 100ms after power-on,

Measurement Conditions: Shown as the following figure. LED_VCCS = Typ, Ta = 25 ± 2 ºC, f_{PWM} = 200 Hz, Duty=100%.

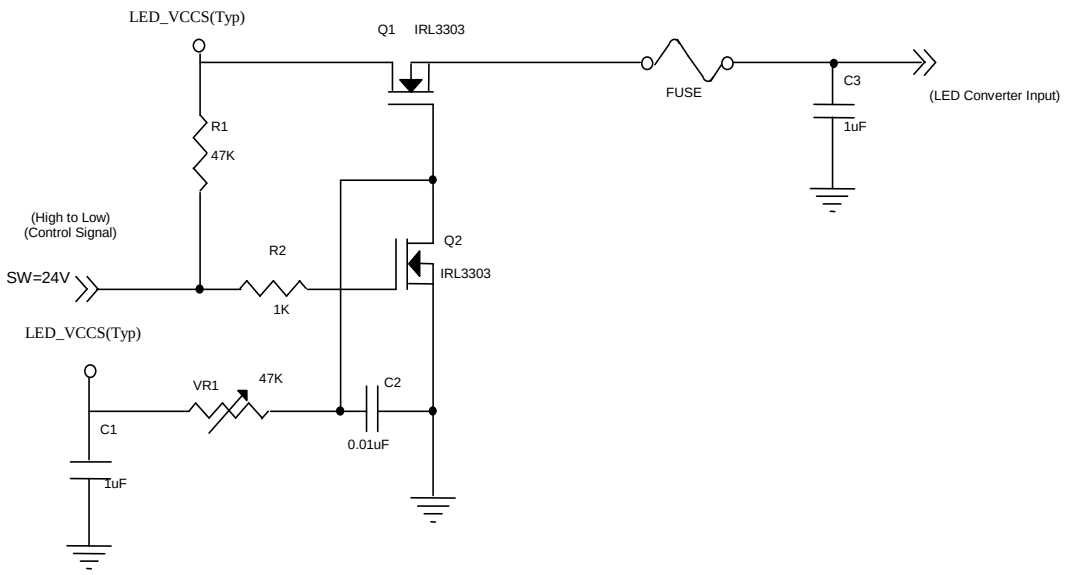

The copyright belongs to InnoLux. Any unauthorized use is prohibited.

VLED rising time is 0.5ms

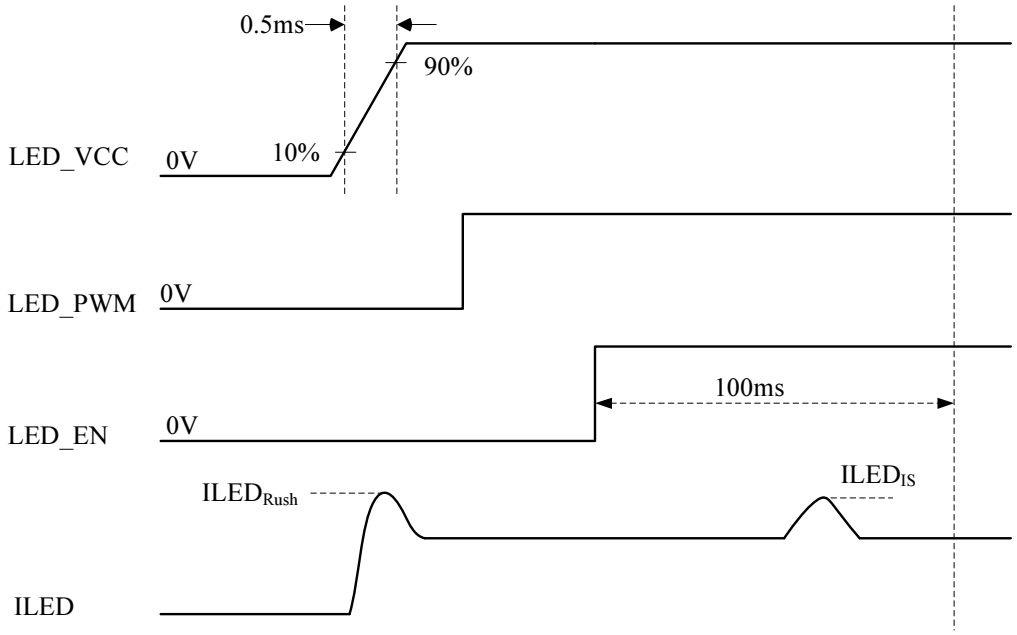

Note (2) If PWM control frequency is applied in the range less than 1KHz, the "waterfall" phenomenon on the screen may be found. To avoid the issue, it's a suggestion that PWM control frequency should follow the criterion as below.

PWM control frequency f_{PWM} should be in the range

$$(N+0.33)*f \le f_{PWM} \le (N+0.66)*f$$

N : Integer $(N \ge 3)$

f : Frame rate

Note (3) The specified LED power supply current is under the conditions at "LED_VCCS = Typ.", Ta = 25 ± 2 ºC, f_{PWM} = 200 Hz, Duty=100%.

The copyright belongs to InnoLux. Any unauthorized use is prohibited.

4.3.3 BACKLIGHT UNIT

Ta = 25 ± 2 ºC

Parameter	Symbol	Value			Unit	Note
		Min.	Typ.	Max.		
LED Light Bar Power Supply Voltage	V_L	24.3	25.2	26.1	V	(1)(2)(Duty100%)
LED Light Bar Power Supply Current	I_L		66		mA	
Power Consumption	P_L	-	1.6632	1.7226	W	(3)
LED Life Time	L_{BL}	15,000	-	-	Hrs	(4)

Note (1) LED current is measured by utilizing a high frequency current meter as shown below :

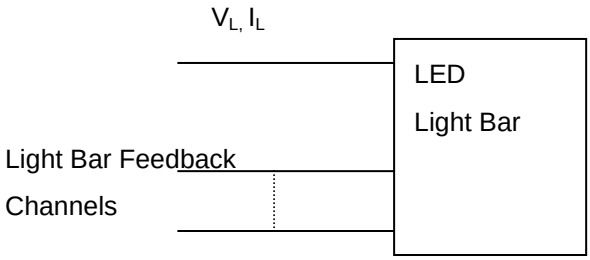

Note (2) For better LED light bar driving quality, it is recommended to utilize the adaptive boost converter with current balancing function to drive LED light-bar.

Note (3) PL = IL ×VL (Without LED converter transfer efficiency)

Note (4) The lifetime of LED is defined as the time when it continues to operate under the conditions at Ta = 25 ±2 oC and IL = 22mA (Per EA) until the brightness becomes ≦ 50% of its original value.

The copyright belongs to InnoLux. Any unauthorized use is prohibited.

4.4 DISPLAY PORT INPUT SIGNAL TIMING SPECIFICATIONS

4.4.1 DISPLAY PORT INTERFACE

Parameter	Symbol	Min.	Typ.	Max.	Unit	Notes
Differential Signal Common Mode Voltage(MainLink and AUX)	VCM	0		2	V	(1)(3)
AUX AC Coupling Capacitor	C_{AUX}	75		200	nF	(2)

Note (1)Display port interface related AC coupled signals should follow VESA DisplayPort Standard Version1. Revision 1a and VESA Embedded DisplayPort™ Standard Version 1.2. There are many optional items described in eDP1.2. If some optional item is requested, please contact us.

(2)The AUX AC Coupling Capacitor should be placed on Source Devices.

(3)The source device should pass the test criteria described in DisplayPortCompliance Test Specification (CTS) 1.1

Single Ended

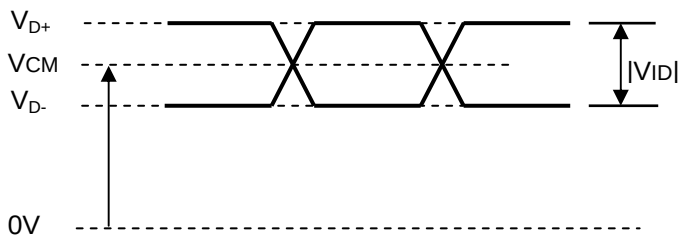

The copyright belongs to InnoLux. Any unauthorized use is prohibited.

4.4.2 COLOR DATA INPUT ASSIGNMENT

The brightness of each primary color (red, green and blue) is based on the 6-bit gray scale data input for the color. The higher the binary input the brighter the color. The table below provides the assignment of color versus data input.

Color		Data Signal																	
		Red						Green						Blue					
		R5	R4	R3	R2	R1	R0	G5	G4	G3	G2	G1	G0	B5	B4	B3	B2	B1	B0
Basic Colors	Black	0	0	0	0	0	0	0	0	0	0	0	0	0	0	0	0	0	0
	Red	1	1	1	1	1	1	0	0	0	0	0	0	0	0	0	0	0	0
	Green	0	0	0	0	0	0	1	1	1	1	1	1	0	0	0	0	0	0
	Blue	0	0	0	0	0	0	0	0	0	0	0	0	1	1	1	1	1	1
	Cyan	0	0	0	0	0	0	1	1	1	1	1	1	1	1	1	1	1	1
	Magenta	1	1	1	1	1	1	0	0	0	0	0	0	1	1	1	1	1	1
	Yellow	1	1	1	1	1	1	1	1	1	1	1	1	0	0	0	0	0	0
	White	1	1	1	1	1	1	1	1	1	1	1	1	1	1	1	1	1	1
Gray Scale Of Red	Red(0)/Dark	0	0	0	0	0	0	0	0	0	0	0	0	0	0	0	0	0	0
	Red(1)	0	0	0	0	0	1	0	0	0	0	0	0	0	0	0	0	0	0
	Red(2)	0	0	0	0	1	0	0	0	0	0	0	0	0	0	0	0	0	0
	:	:	:	:	:	:	:	:	:	:	:	:	:	:	:	:	:	:	:
	:	:	:	:	:	:	:	:	:	:	:	:	:	:	:	:	:	:	:
	Red(61)	1	1	1	1	0	1	0	0	0	0	0	0	0	0	0	0	0	0
	Red(62)	1	1	1	1	1	0	0	0	0	0	0	0	0	0	0	0	0	0
	Red(63)	1	1	1	1	1	1	0	0	0	0	0	0	0	0	0	0	0	0
Gray Scale Of Green	Green(0)/Dark	0	0	0	0	0	0	0	0	0	0	0	0	0	0	0	0	0	0
	Green(1)	0	0	0	0	0	0	0	0	0	0	0	1	0	0	0	0	0	0
	Green(2)	0	0	0	0	0	0	0	0	0	0	1	0	0	0	0	0	0	0
	:	:	:	:	:	:	:	:	:	:	:	:	:	:	:	:	:	:	:
	:	:	:	:	:	:	:	:	:	:	:	:	:	:	:	:	:	:	:
	Green(61)	0	0	0	0	0	0	1	1	1	1	0	1	0	0	0	0	0	0
	Green(62)	0	0	0	0	0	0	1	1	1	1	1	0	0	0	0	0	0	0
	Green(63)	0	0	0	0	0	0	1	1	1	1	1	1	0	0	0	0	0	0
Gray Scale Of Blue	Blue(0)/Dark	0	0	0	0	0	0	0	0	0	0	0	0	0	0	0	0	0	0
	Blue(1)	0	0	0	0	0	0	0	0	0	0	0	0	0	0	0	0	0	1
	Blue(2)	0	0	0	0	0	0	0	0	0	0	0	0	0	0	0	0	1	0
	:	:	:	:	:	:	:	:	:	:	:	:	:	:	:	:	:	:	:
	:	:	:	:	:	:	:	:	:	:	:	:	:	:	:	:	:	:	:
	Blue(61)	0	0	0	0	0	0	0	0	0	0	0	0	1	1	1	1	0	1
	Blue(62)	0	0	0	0	0	0	0	0	0	0	0	0	1	1	1	1	1	0
	Blue(63)	0	0	0	0	0	0	0	0	0	0	0	0	1	1	1	1	1	1

Note (1) 0: Low Level Voltage, 1: High Level Voltage

The copyright belongs to InnoLux. Any unauthorized use is prohibited.

4.4.3 DISPLAY TIMING SPECIFICATIONS

The input signal timing specifications are shown as the following table and timing diagram.

Signal	Item	Symbol	Min.	Typ.	Max.	Unit	Note
DCLK	Frequency	1/Tc	72.60	76.42	80.24	MHz	-
DE	Vertical Total Time	TV	788	800	868	TH	-
	Vertical Active Display Period	TVD	768	768	768	TH	-
	Vertical Active Blanking Period	TVB	TV-TVD	32	TV-TVD	TH	-
	Horizontal Total Time	TH	1466	1592	1716	Tc	-
	Horizontal Active Display Period	THD	1366	1366	1366	Tc	-
	Horizontal Active Blanking Period	THB	TH-THB	(226)	TH-THB	Tc	-

Refresh rate 48Hz

Signal	Item	Symbol	Min.	Typ.	Max.	Unit	Note
DCLK	Frequency	1/Tc	58.07	61.13	64.19	MHz	-
DE	Vertical Total Time	TV	788	800	868	TH	-
	Vertical Active Display Period	TVD	768	768	768	TH	-
	Vertical Active Blanking Period	TVB	TV-TVD	32	TV-TVD	TH	-
	Horizontal Total Time	TH	1466	1592	1716	Tc	-
	Horizontal Active Display Period	THD	1366	1366	1366	Tc	-
	Horizontal Active Blanking Period	THB	TH-THB	226	TH-THB	Tc	-

INPUT SIGNAL TIMING DIAGRAM

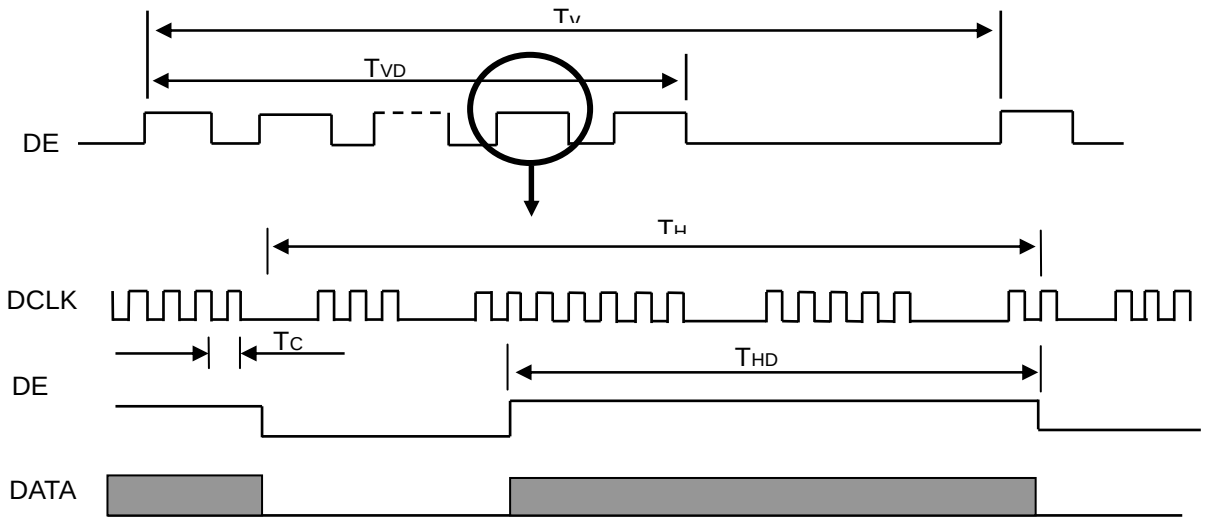

The copyright belongs to InnoLux. Any unauthorized use is prohibited.

4.5 POWER ON/OFF SEQUENCE

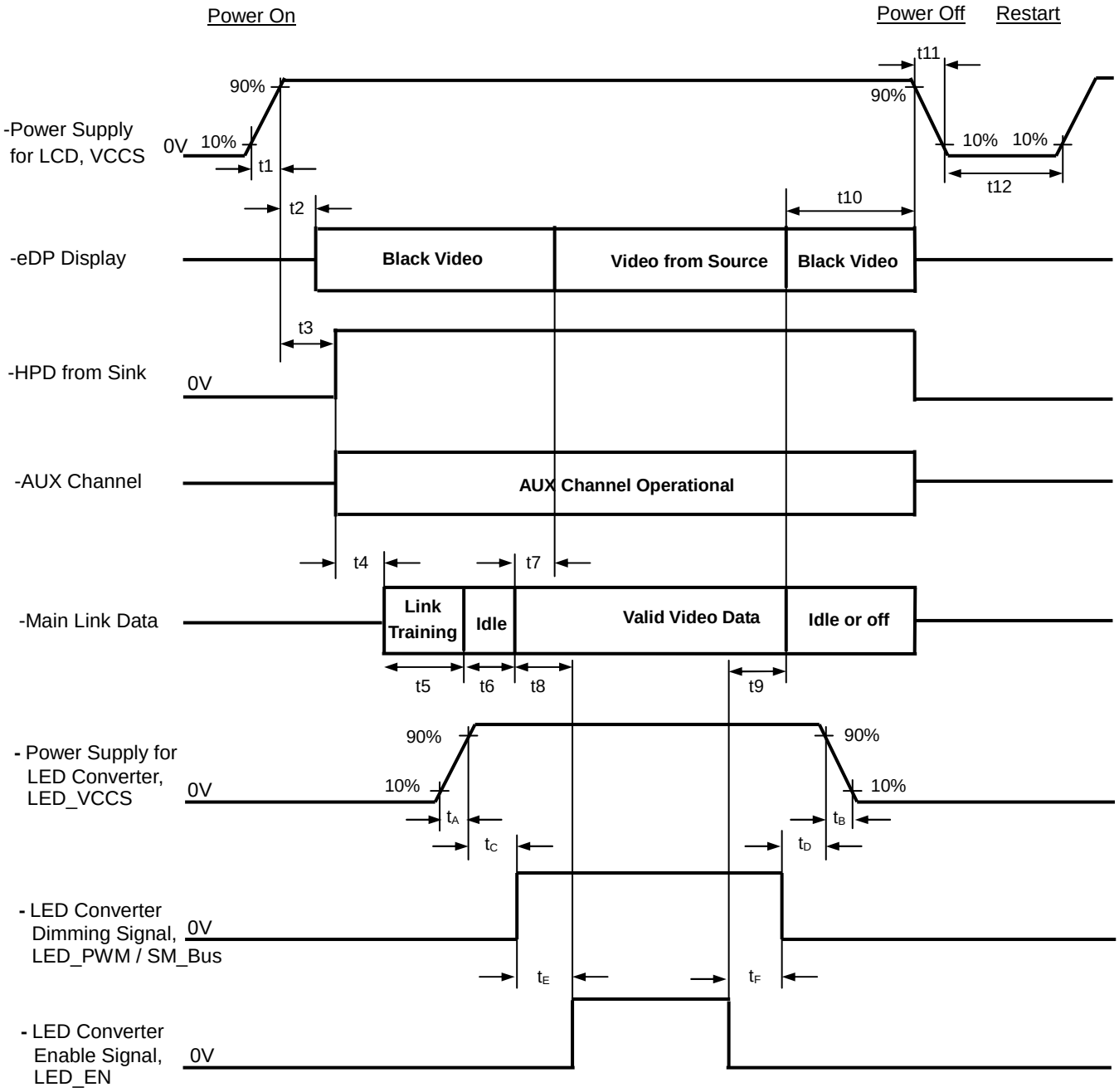

The copyright belongs to InnoLux. Any unauthorized use is prohibited.

Timing Specifications:

Parameter	Description	Reqd. By	Value		Unit	Notes
			Min	Max		
t1	Power rail rise time, 10% to 90%	Source	0.5	10	ms	-
t2	Delay from LCD,VCCS to black video generation	Sink	0	200	ms	Automatic Black Video generation prevents display noise until valid video data is received from the Source (see Notes:2 and 3 below)
t3	Delay from LCD,VCCS to HPD high	Sink	0	200	ms	Sink AUX Channel must be operational upon HPD high (see Note:4 below)
t4	Delay from HPD high to link training initialization	Source	-	-	ms	Allows for Source to read Link capability and initialize
t5	Link training duration	Source	-	-	ms	Dependant on Source link training protocol
t6	Link idle	Source	-	-	ms	Min Accounts for required BS-Idle pattern. Max allows for Source frame synchronization
t7	Delay from valid video data from Source to video on display	Sink	0	50	ms	Max value allows for Sink to validate video data and timing. At the end of T7, Sink will indicate the detection of valid video data by setting the SINK_STATUS bit to logic 1 (DPCD 00205h, bit 0), and Sink will no longer generate automatic Black Video
t8	Delay from valid video data from Source to backlight on	Source	-	-	ms	Source must assure display video is stable
t9	Delay from backlight off to end of valid video data	Source	-	-	ms	Source must assure backlight is no longer illuminated. At the end of T9, Sink will indicate the detection of no valid video data by setting the SINK_STATUS bit to logic 0 (DPCD 00205h, bit 0), and Sink will automatically display Black Video. (See Notes: 2 and 3 below)
t10	Delay from end of valid video data from Source to power off	Source	0	500	ms	Black video will be displayed after receiving idle or off signals from Source -
t11	VCCS power rail fall time, 90% to 10%	Source	0.5	10	ms	-
t12	VCCS Power off time	Source	500	-	ms	-
t_A	LED power rail rise time, 10% to 90%	Source	0.5	10	ms	-
t_B	LED power rail fall time, 90% to 10%	Source	0	10	ms	-

The copyright belongs to InnoLux. Any unauthorized use is prohibited.

t_C	Delay from LED power rising to LED dimming signal	Source	1	-	ms	-
t_D	Delay from LED dimming signal to LED power falling	Source	1	-	ms	-
t_E	Delay from LED dimming signal to LED enable signal	Source	1	-	ms	-
t_F	Delay from LED enable signal to LED dimming signal	Source	1	-	ms	-

Note (1) Please don't plug or unplug the interface cable when system is turned on.

Note (2) The Sink must include the ability to automatically generate Black Video autonomously. The Sink must automatically enable Black Video under the following conditions:

- Upon LCDVCC power-on (within T2 max)
- When the "NoVideoStream_Flag" (VB-ID Bit 3) is received from the Source (at the end of T9)

Note (3) The Sink may implement the ability to disable the automatic Black Video function, as described in Note (2), above, for system development and debugging purposes.

Note (4) The Sink must support AUX Channel polling by the Source immediately following LCDVCC power-on without causing damage to the Sink device (the Source can re-try if the Sink is not ready). The Sink must be able to response to an AUX Channel transaction with the time specified within T3 max.

The copyright belongs to InnoLux. Any unauthorized use is prohibited.

5. OPTICAL CHARACTERISTICS

5.1 TEST CONDITIONS

Item	Symbol	Value	Unit
Ambient Temperature	Ta	25±2	°C
Ambient Humidity	Ha	50±10	%RH
Supply Voltage	V_{CC}	3.3	V
Input Signal	According to typical value in "3. ELECTRICAL CHARACTERISTICS"		
LED Light Bar Input Current	I_L	66	mA

The measurement methods of optical characteristics are shown in Section 5.2. The following items should be measured under the test conditions described in Section 5.1 and stable environment shown in Note (5).

5.2 OPTICAL SPECIFICATIONS

Item		Symbol	Condition	Min.	Typ.	Max.	Unit	Note
Contrast Ratio		CR	θ_x=0°, θ_Y =0° Viewing Normal Angle	300	400	-	-	(2), (5),(7)
Response Time		T_R		-	8	12	ms	(3),(7)
		T_F		-	8	13	ms	
Average Luminance of White		L_{AVE}		170	200	-	cd/m^2	(4), (6),(7)
Color Chromaticity	Red	Rx		Typ – 0.03	0.595	Typ + 0.03	-	(1),(7)
		Ry			0.345		-	
	Green	Gx			0.320		-	
		Gy			0.565		-	
	Blue	Bx			0.155		-	
		By			0.130		-	
	White	Wx			0.313		-	
		Wy			0.329		-	
Viewing Angle	Horizontal	θ_x+	CR≥10	40	45		Deg.	(1),(5), (7)
		θ_x-		40	45	-		
	Vertical	θ_Y+		15	20	-		
		θ_Y-		40	45	-		
White Variation of 5 Points		δW_{5p}	θ_x=0°, θ_Y =0°	70	80	-	%	(5),(6), (7)

The copyright belongs to InnoLux. Any unauthorized use is prohibited.

Note (1) Definition of Viewing Angle (θx, θy):

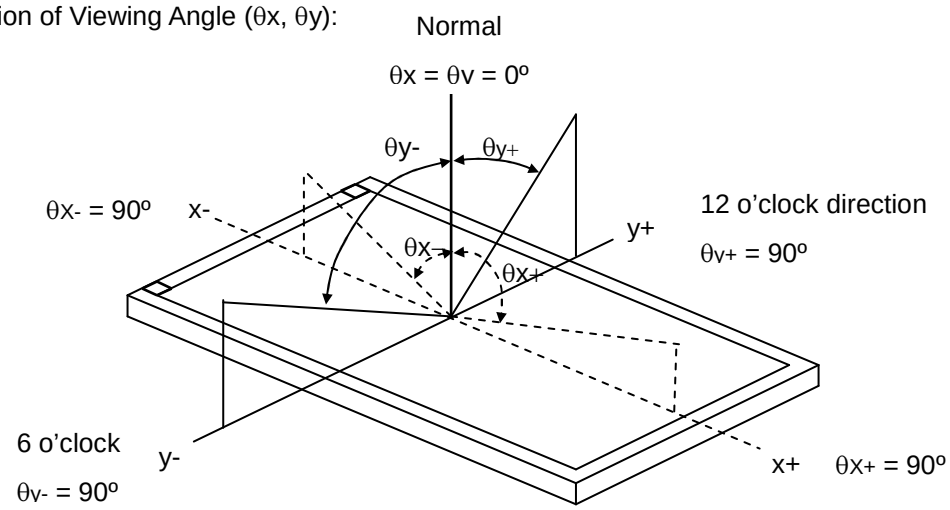

Note (2) Definition of Contrast Ratio (CR):

The contrast ratio can be calculated by the following expression.

Contrast Ratio (CR) = L63 / L0

L63: Luminance of gray level 63

L 0: Luminance of gray level 0

CR = CR (1)

CR (X) is corresponding to the Contrast Ratio of the point X at Figure in Note (6).

Note (3) Definition of Response Time (T_R, T_F):

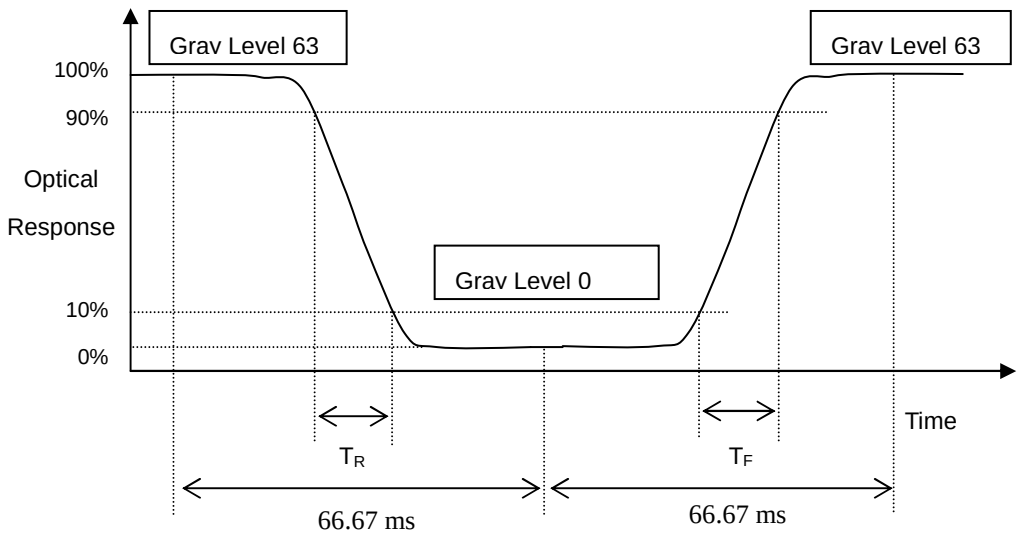

Note (4) Definition of Average Luminance of White (L_{AVE}):

Measure the luminance of White at 5 points

L_{AVE} = [L (1)+ L (2)+ L (3)+ L (4)+ L (5)] / 5

L (x) is corresponding to the luminance of the point X at Figure in Note (6)

The copyright belongs to InnoLux. Any unauthorized use is prohibited.

Note (5) Measurement Setup:

The LCD module should be stabilized at given temperature for 20 minutes to avoid abrupt temperature change during measuring. In order to stabilize the luminance, the measurement should be executed after lighting Backlight for 20 minutes in a windless room.

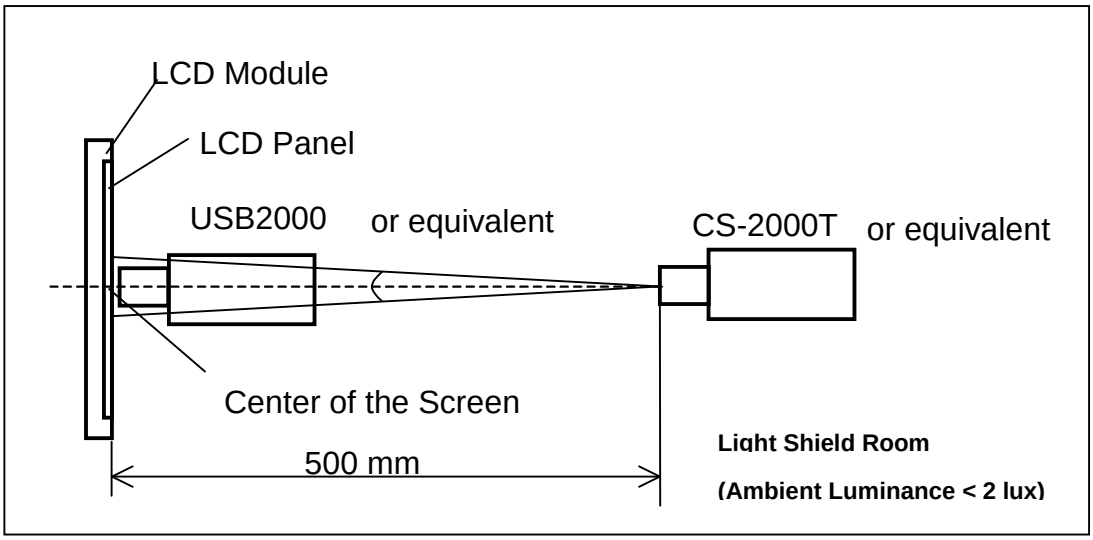

Note (6) Definition of White Variation (δW):

Measure the luminance of White at 5 points

δW_{5p} = {Minimum [L (1)~L (5)] / Maximum [L (1)~ L (5)]}*100%

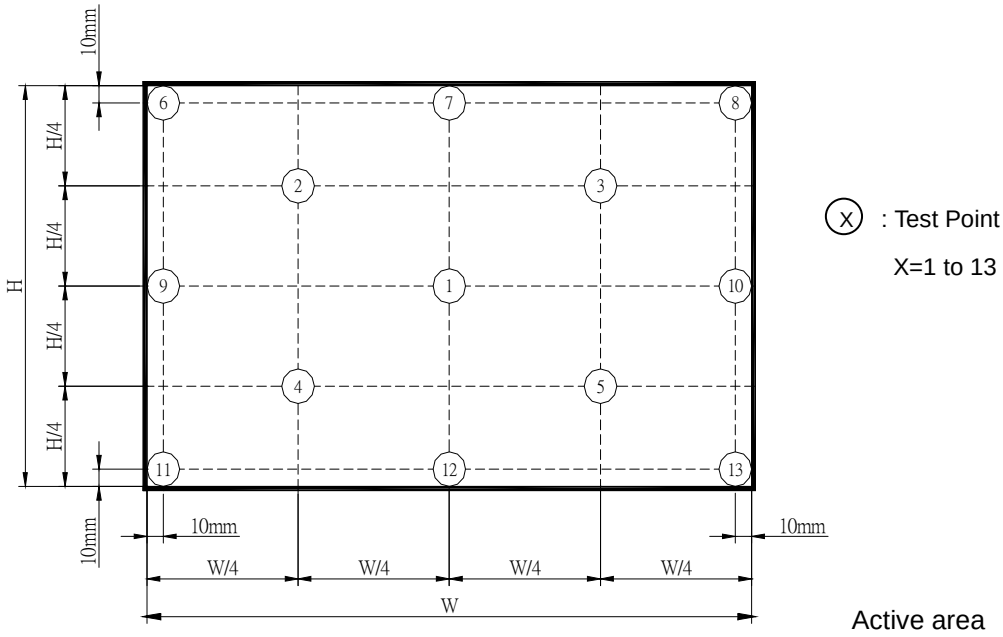

Note (7) The listed optical specifications refer to the initial value of manufacture, but the condition of the specifications after long-term operation will not be warranted.

The copyright belongs to InnoLux. Any unauthorized use is prohibited.

6. RELIABILITY TEST ITEM

Test Item	Test Condition	Note
High Temperature Storage Test	60ºC, 240 hours	(1) (2)
Low Temperature Storage Test	-20ºC, 240 hours	
Thermal Shock Storage Test	-20ºC, 0.5hour⟷60℃, 0.5hour; 100cycles, 1hour/cycle	
High Temperature Operation Test	50ºC, 240 hours	
Low Temperature Operation Test	0ºC, 240 hours	
High Temperature & High Humidity Operation Test	50℃, 80% RH, 240 hours	
ESD Test (Operation)	150pF, 330Ω, 1sec/cycle Condition 1 : Contact Discharge, ±8KV Condition 2 : Air Discharge, ±15KV	(1)
Shock (Non-Operating)	220G, 2ms, half sine wave,1 time for each direction of ±X,±Y,±Z	(1)(3)
Vibration (Non-Operating)	1.5G / 10-500 Hz, Sine wave, 30 min/cycle, 1cycle for each X, Y, Z	(1)(3)

Note (1) criteria : Normal display image with no obvious non-uniformity and no line defect.

Note (2) Evaluation should be tested after storage at room temperature for more than two hour

Note (3) At testing Vibration and Shock, the fixture in holding the module has to be hard and rigid enough so that the module would not be twisted or bent by the fixture.

The copyright belongs to InnoLux. Any unauthorized use is prohibited.

7. PACKING

7.1 MODULE LABEL

The barcode nameplate is pasted on each module as illustration, and its definitions are as following explanation.

(a) Model Name: N133BGE - E41

(b) Revision: Rev. XX, for example: C1, C2 …etc.

(c) Serial ID: X X X X X X X Y M D L N N N N

- N N N N — Serial No.
- L — Product Line
- Y M D — Year, Month, Date
- X X X — CMO Internal Use
- X X — Revision
- X — CMO Internal Use

Serial ID includes the information as below:

(a) Manufactured Date: Year: 0~9, for 2010~2019

Month: 1~9, A~C, for Jan. ~ Dec.

Day: 1~9, A~Y, for 1st to 31st, exclude I , O and U

(b) Revision Code: cover all the change

(c) Serial No.: Manufacturing sequence of product

(d) Product Line: 1 -> Line1, 2 -> Line 2, …etc.

The copyright belongs to InnoLux. Any unauthorized use is prohibited.

7.2 CARTON

(1)Box Dimensions : 540(L)*450(W)*275(H)
(2)40 Modules/Carton

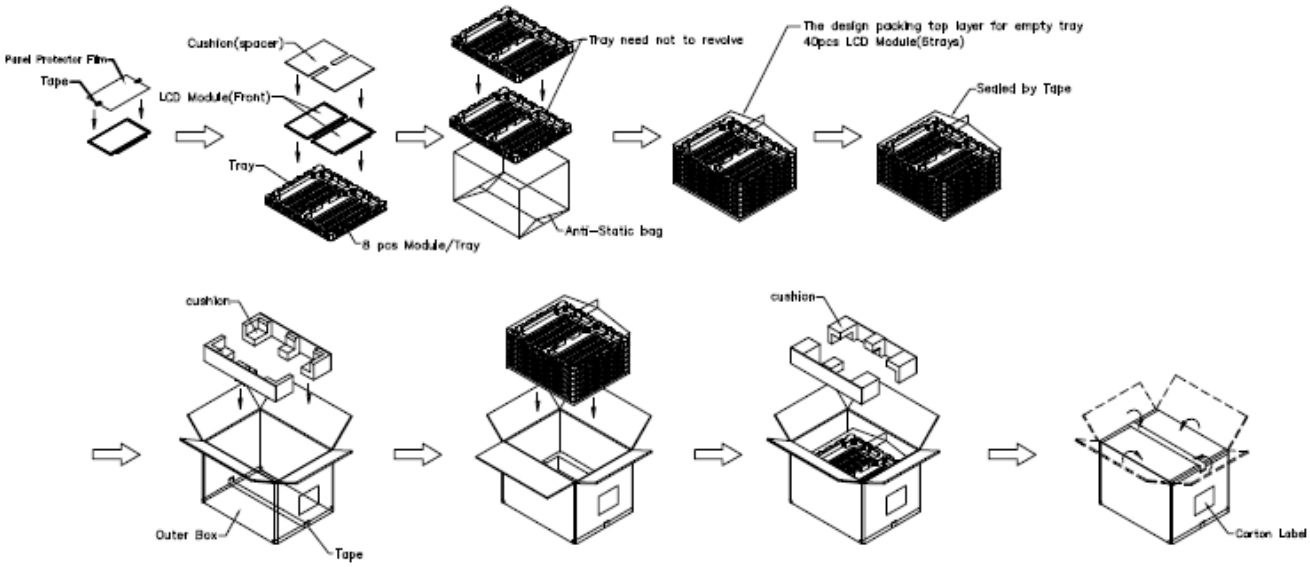

Figure. 7- 2 Packing method

The copyright belongs to InnoLux. Any unauthorized use is prohibited.

7.3 PALLET

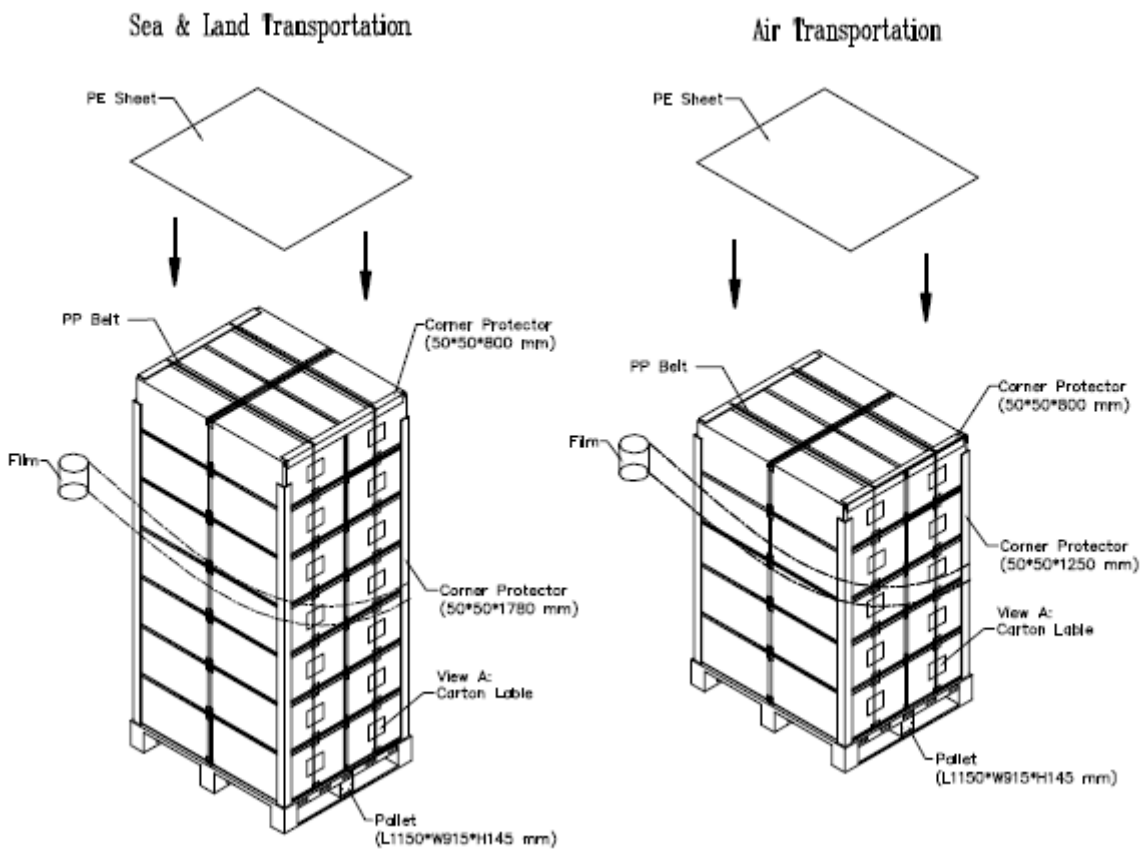

Figure. 7-3 Packing method

The copyright belongs to InnoLux. Any unauthorized use is prohibited.

7.4 UN-PACKAGING METHOD

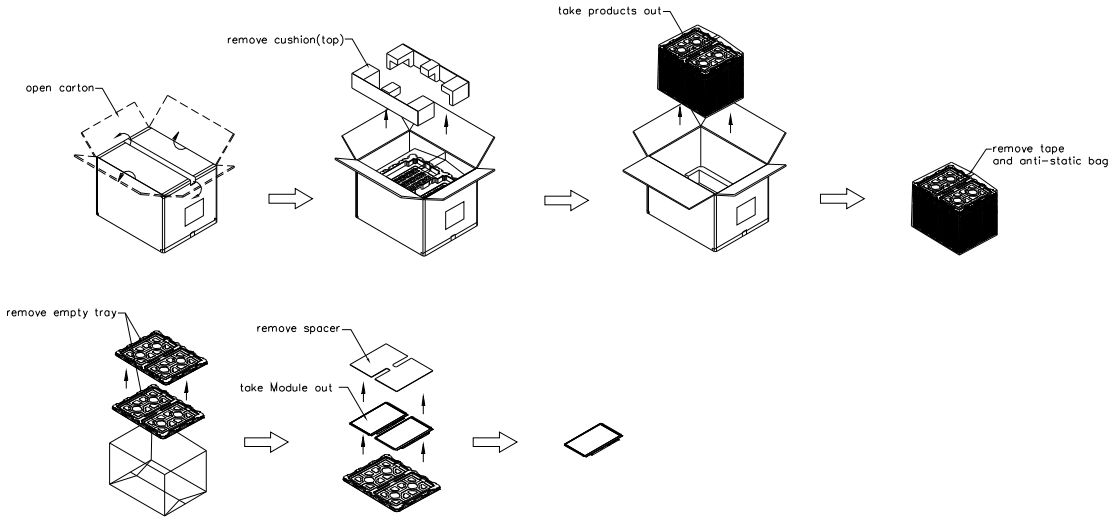

Figure. 7- 4 Unpacking method

The copyright belongs to InnoLux. Any unauthorized use is prohibited.

8. PRECAUTIONS

8.1 HANDLING PRECAUTIONS

(1) The module should be assembled into the system firmly by using every mounting hole. Be careful not to twist or bend the module.

(2) While assembling or installing modules, it can only be in the clean area. The dust and oil may cause electrical short or damage the polarizer.

(3) Use fingerstalls or soft gloves in order to keep display clean during the incoming inspection and assembly process.

(4) Do not press or scratch the surface harder than a HB pencil lead on the panel because the polarizer is very soft and easily scratched.

(5) If the surface of the polarizer is dirty, please clean it by some absorbent cotton or soft cloth. Do not use Ketone type materials (ex. Acetone), Ethyl alcohol, Toluene, Ethyl acid or Methyl chloride. It might permanently damage the polarizer due to chemical reaction.

(6) Wipe off water droplets or oil immediately. Staining and discoloration may occur if they left on panel for a long time.

(7) If the liquid crystal material leaks from the panel, it should be kept away from the eyes or mouth. In case of contacting with hands, legs or clothes, it must be washed away thoroughly with soap.

(8) Protect the module from static electricity, it may cause damage to the C-MOS Gate Array IC.

(9) Do not disassemble the module.

(10) Do not pull or fold the LED wire.

(11) Pins of I/F connector should not be touched directly with bare hands.

8.2 STORAGE PRECAUTIONS

(1) High temperature or humidity may reduce the performance of module. Please store LCD module within the specified storage conditions.

(2) It is dangerous that moisture come into or contacted the LCD module, because the moisture may damage LCD module when it is operating.

(3) It may reduce the display quality if the ambient temperature is lower than 10 ºC. For example, the response time will become slowly, and the starting voltage of LED will be higher than the room temperature.

8.3 OPERATION PRECAUTIONS

(1) Do not pull the I/F connector in or out while the module is operating.

(2) Always follow the correct power on/off sequence when LCD module is connecting and operating. This can prevent the CMIS LSI chips from damage during latch-up.

(3) The startup voltage of Backlight is approximately 1000 Volts. It may cause electrical shock while assembling with converter. Do not disassemble the module or insert anything into the Backlight unit.

The copyright belongs to InnoLux. Any unauthorized use is prohibited.

Appendix. EDID DATA STRUCTURE

The EDID (Extended Display Identification Data) data formats are to support displays as defined in the VESA Plug & Display and FPDI standards.

Byte # (decimal)	Byte # (hex)	Field Name and Comments	Value (hex)	Value (binary)
0	0	Header	00	00000000
1	1	Header	FF	11111111
2	2	Header	FF	11111111
3	3	Header	FF	11111111
4	4	Header	FF	11111111
5	5	Header	FF	11111111
6	6	Header	FF	11111111
7	7	Header	00	00000000
8	8	EISA ID manufacturer name (“CMN”)	0D	00001101
9	9	EISA ID manufacturer name (Compressed ASCII)	AE	10101110
10	0A	ID product code (N133BGE-E31)	52	01010010
11	0B	ID product code (hex LSB first; N133BGE-E31)	13	00010011
12	0C	ID S/N (fixed “0”)	00	00000000
13	0D	ID S/N (fixed “0”)	00	00000000
14	0E	ID S/N (fixed “0”)	00	00000000
15	0F	ID S/N (fixed “0”)	00	00000000
16	10	Week of manufacture (fixed week code)	0D	00001101
17	11	Year of manufacture (fixed year code)	17	00010111
18	12	EDID structure version # (“1”)	01	00000001
19	13	EDID revision # (“4”)	04	00000100
20	14	Video I/P definition (“digital”)	95	10010101
21	15	Max H image size (“29cm”)	1D	00011101
22	16	Max V image size (“17cm”)	11	00010001
23	17	Display Gamma (Gamma = ”2.2”)	78	01111000
24	18	Feature support (“Active off, RGB Color”)	02	00000010
25	19	Rx1, Rx0, Ry1, Ry0, Gx1, Gx0, Gy1, Gy0	53	01010011
26	1A	Bx1, Bx0, By1, By0, Wx1, Wx0, Wy1, Wy0	D5	11010101
27	1B	Rx=0.595	98	10011000
28	1C	Ry=0.345	58	01011000
29	1D	Gx=0.32	52	01010010
30	1E	Gy=0.565	90	10010000
31	1F	Bx=0.155	27	00100111
32	20	By=0.13	21	00100001
33	21	Wx=0.313	50	01010000
34	22	Wy=0.329	54	01010100
35	23	Established timings 1	00	00000000
36	24	Established timings 2	00	00000000
37	25	Manufacturer’s reserved timings	00	00000000
38	26	Standard timing ID # 1	01	00000001
39	27	Standard timing ID # 1	01	00000001
40	28	Standard timing ID # 2	01	00000001
41	29	Standard timing ID # 2	01	00000001

The copyright belongs to InnoLux. Any unauthorized use is prohibited.

42	2A	Standard timing ID # 3	01	00000001
43	2B	Standard timing ID # 3	01	00000001
44	2C	Standard timing ID # 4	01	00000001
45	2D	Standard timing ID # 4	01	00000001
46	2E	Standard timing ID # 5	01	00000001
47	2F	Standard timing ID # 5	01	00000001
48	30	Standard timing ID # 6	01	00000001
49	31	Standard timing ID # 6	01	00000001
50	32	Standard timing ID # 7	01	00000001
51	33	Standard timing ID # 7	01	00000001
52	34	Standard timing ID # 8	01	00000001
53	35	Standard timing ID # 8	01	00000001
54	36	Detailed timing description # 1 Pixel clock (“76.42MHz”, According to VESA CVT Rev1.1)	DA	11011010
55	37	# 1 Pixel clock (hex LSB first)	1D	00011101
56	38	# 1 H active (“1366”)	56	01010110
57	39	# 1 H blank (“226”)	E2	11100010
58	3A	# 1 H active : H blank (“1366 : 226”)	50	01010000
59	3B	# 1 V active (”768”)	00	00000000
60	3C	# 1 V blank (”32”)	20	00100000
61	3D	# 1 V active : V blank (”768 :32”)	30	00110000
62	3E	# 1 H sync offset (”68”)	44	01000100
63	3F	# 1 H sync pulse width ("45”)	2D	00101101
64	40	# 1 V sync offset : V sync pulse width (”4 : 7”)	47	01000111
65	41	# 1 H sync offset : H sync pulse width : V sync offset : V sync width (”68: 45 : 4 : 7”)	00	00000000
66	42	# 1 H image size (”293 mm”)	25	00100101
67	43	# 1 V image size (”165 mm”)	A5	10100101
68	44	# 1 H image size : V image size (”293 : 165”)	10	00010000
69	45	# 1 H boarder (”0”)	00	00000000
70	46	# 1 V boarder (”0”)	00	00000000
71	47	# 1 Non-interlaced, Normal, no stereo, Separate sync, H/V pol Negatives	18	00011000
72	48	Detailed timing description # 2	00	00000000
73	49	# 2 Flag	00	00000000
74	4A	# 2 Reserved	00	00000000
75	4B	# 2 FE (hex) defines ASCII string (Model Name “N133BGE-E31”, ASCII)	FE	11111110
76	4C	# 2 Flag	00	00000000
77	4D	# 2 1st character of name (“N”)	4E	01001110
78	4E	# 2 2nd character of name (“1”)	31	00110001
79	4F	# 2 3rd character of name (“3”)	33	00110011
80	50	# 2 4th character of name (“3”)	33	00110011
81	51	# 2 5th character of name (“B”)	42	01000010
82	52	# 2 6th character of name (“G”)	47	01000111
83	53	# 2 7th character of name (“E”)	45	01000101
84	54	# 2 8th character of name (“-”)	2D	00101101
85	55	# 2 9th character of name (“E”)	45	01000101
86	56	# 2 10th character of name (“3”)	33	00110011

The copyright belongs to InnoLux. Any unauthorized use is prohibited.

87	57	# 2 11th character of name (“1”)	31	00110001
88	58	# 2 New line character indicates end of ASCII string	0A	00001010
89	59	# 2 Padding with “Blank” character	20	00100000
90	5A	Detailed timing description # 3	00	00000000
91	5B	# 3 Flag	00	00000000
92	5C	# 3 Reserved	00	00000000
93	5D	# 3 FE (hex) defines ASCII string (Vendor “CMN”, ASCII)	FE	11111110
94	5E	# 3 Flag	00	00000000
95	5F	# 3 1st character of string (“C”)	43	01000011
96	60	# 3 2nd character of string (“M”)	4D	01001101
97	61	# 3 3rd character of string (“N”)	4E	01001110
98	62	# 3 New line character indicates end of ASCII string	0A	00001010
99	63	# 3 Padding with “Blank” character	20	00100000
100	64	# 3 Padding with “Blank” character	20	00100000
101	65	# 3 Padding with “Blank” character	20	00100000
102	66	# 3 Padding with “Blank” character	20	00100000
103	67	# 3 Padding with “Blank” character	20	00100000
104	68	# 3 Padding with “Blank” character	20	00100000
105	69	# 3 Padding with “Blank” character	20	00100000
106	6A	# 3 Padding with “Blank” character	20	00100000
107	6B	# 3 Padding with “Blank” character	20	00100000
108	6C	Detailed timing description # 4	00	00000000
109	6D	# 4 Flag	00	00000000
110	6E	# 4 Reserved	00	00000000
111	6F	# 4 FE (hex) defines ASCII string (Model Name“N133BGE-E31”, ASCII)	FE	11111110
112	70	# 4 Flag	00	00000000
113	71	# 4 1st character of name (“N”)	4E	01001110
114	72	# 4 2nd character of name (“1”)	31	00110001
115	73	# 4 3rd character of name (“3”)	33	00110011
116	74	# 4 4th character of name (“3”)	33	00110011
117	75	# 4 5th character of name (“B”)	42	01000010
118	76	# 4 6th character of name (“G”)	47	01000111
119	77	# 4 7th character of name (“E”)	45	01000101
120	78	# 4 8th character of name (“-”)	2D	00101101
121	79	# 4 9th character of name (“E”)	45	01000101
122	7A	# 4 10th character of name (“3”)	33	00110011
123	7B	# 4 11th character of name (“1”)	31	00110001
124	7C	# 4 New line character indicates end of ASCII string	0A	00001010
125	7D	# 4 Padding with “Blank” character	20	00100000
126	7E	Extension flag	00	00000000
127	7F	Checksum	A9	10101001

The copyright belongs to InnoLux. Any unauthorized use is prohibited.

Appendix. OUTLINE DRAWING

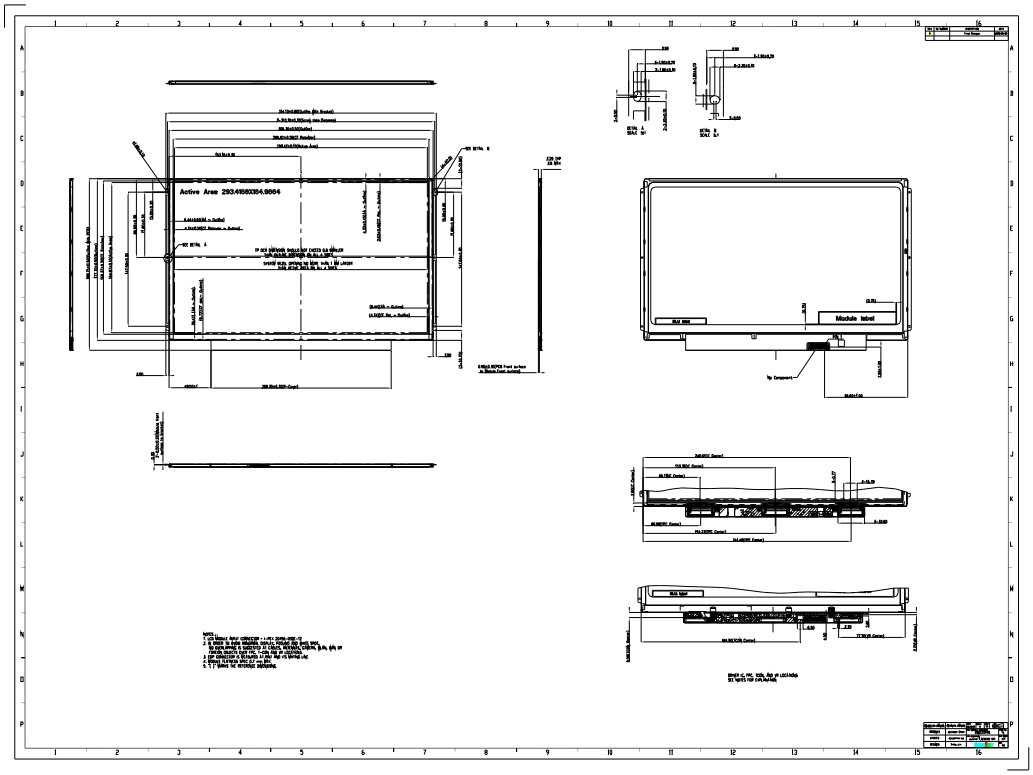

The copyright belongs to InnoLux. Any unauthorized use is prohibited.

Appendix. SYSTEM COVER DESIGN NOTICE Ver.3

0.	**Permanent deformation of system cover after reliability test**
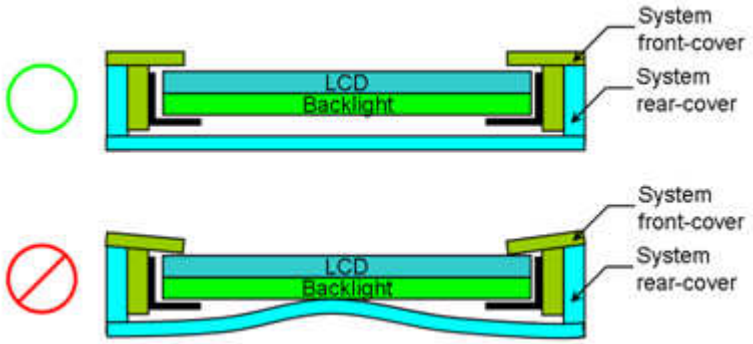	
Definition	System cover including front and rear cover may deform during reliability test. Permanent deformation of system front and rear cover after reliability test should not interfere with panel. Because it may cause issues such as pooling, abnormal display, white spot, and also cell crack.
1.	**Design gap A between panel & any components on system rear-cover**
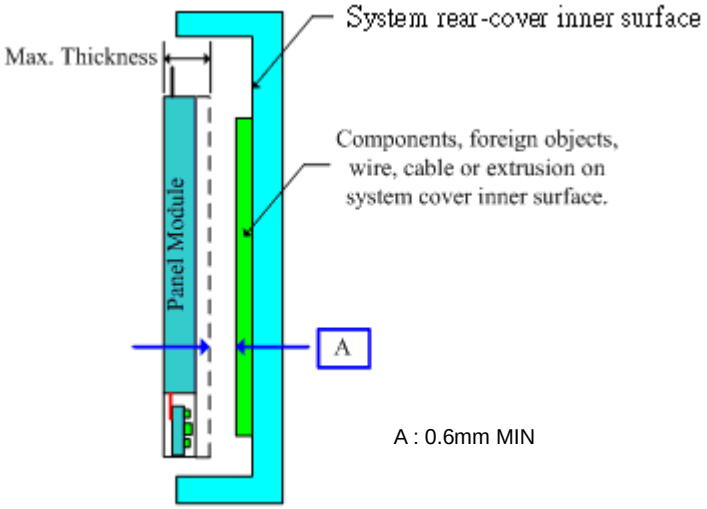	
Definition	Gap between panel's maximum thickness boundary & system's inner surface components such as wire, cable, extrusion is needed for preventing from backpack or pogo test fail. Because zero gap or interference may cause stress concentration. Issues such as pooling, abnormal display, white spot, and cell crack may occur. Flatness of panel and system rear-cover should be taken into account for gap design.
2	**Design gap B1 & B2 between panel & protrusions**

The copyright belongs to InnoLux. Any unauthorized use is prohibited.

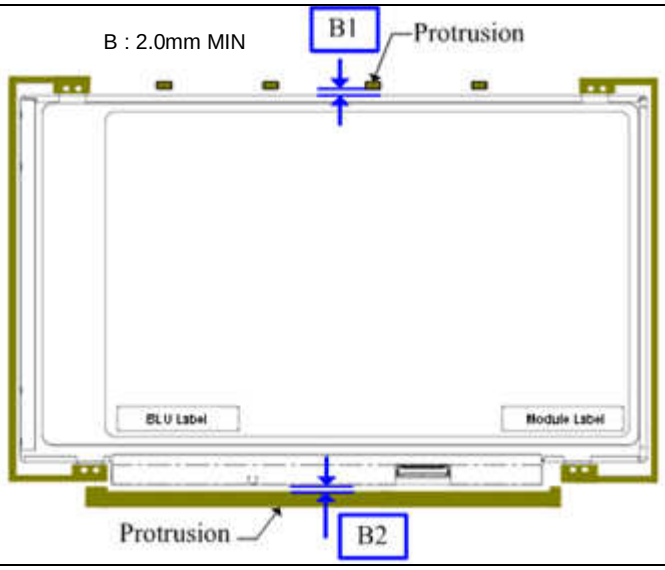

Definition	Gap between panel & protrusions is needed to prevent shock test failure. Because protrusions with small gap may hit panel during the test. Issue such as cell crack, abnormal display may occur.
3	**Design gap C between system front-cover & panel surface.**

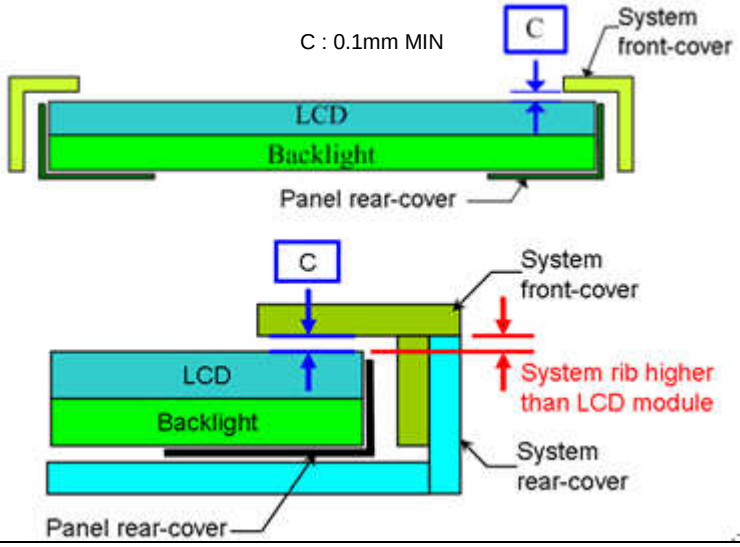

Definition	Gap between system front-cover & panel surface is needed to prevent pooling or glass broken. Zero gap or interference such as burr and warpage from mold frame may cause pooling issue near system font-cover opening edge. This phenomenon is obvious during swing test, hinge test, knock test, or during pooling inspection procedure. To remain sufficient gap, design with system rib higher than maximum panel thickness is recommended.
4	**Design gap D1 & D2 between system front-cover & PCB Assembly.**

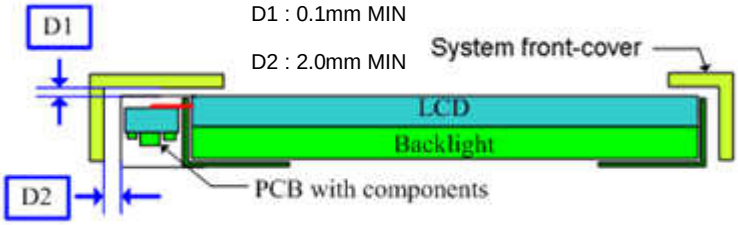

Definition	Same as point 2 and 3, but focus on PCBA side.

The copyright belongs to InnoLux. Any unauthorized use is prohibited.

5	**Interference examination of antenna cable and WebCam wire**
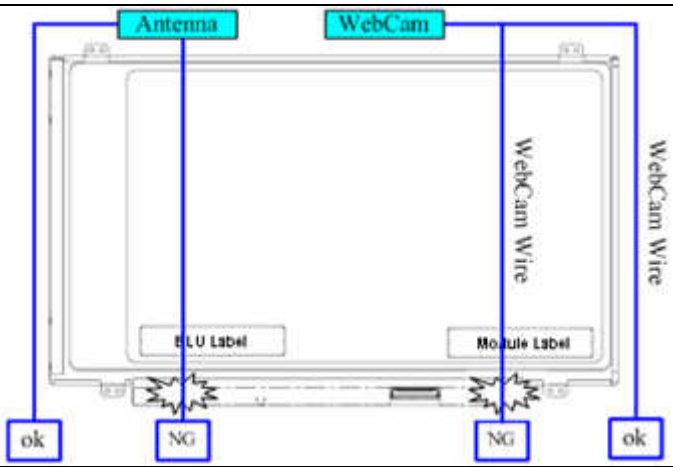	
Definition	Antenna cable or WebCam wire should not overlap with panel outline. Because issue such as abnormal display & white spot after backpack test, hinge test, twist test or pogo test may occur.
6	**System rear-cover inner surface examination**
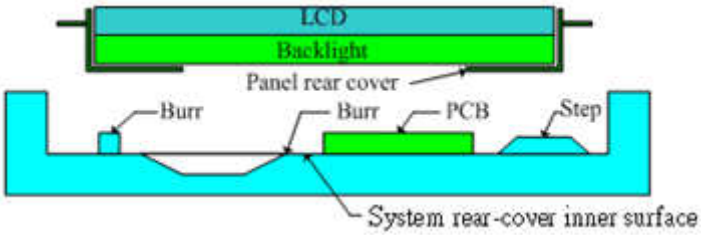	
Definition	Burr at logo edge, steps, protrusions or PCB board may cause stress concentration. White spot or glass broken issue may occur during reliability test.
7	**Tape/sponge design on system inner surface**
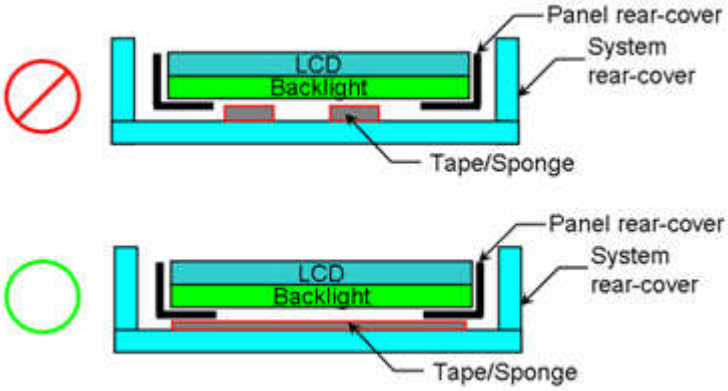	
Definition	To prevent abnormal display & white spot after scuffing test, hinge test, pogo test, backpack test, tape/sponge should be well covered under panel rear-cover. Because tape/sponge in separate location may act as pressure concentration location.
8	**Material used for system rear-cover**
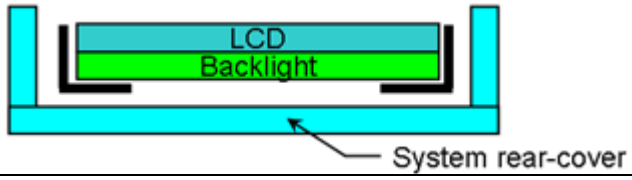	

The copyright belongs to InnoLux. Any unauthorized use is prohibited.

Definition	System rear-cover material with high rigidity is needed to resist deformation during scuffing test, hinge test, pogo test, or backpack test. Abnormal display, white spot, pooling issue may occur if low rigidity material is used. Pooling issue may occur because screw's boss positioning for module's bracket are deformed during open-close test. Solid structure design of system rear-cover may also influence the rigidity of system rear-cover. The deformation of system rear-cover should not caused interference.
9	**System base unit design near keyboard and mouse pad**
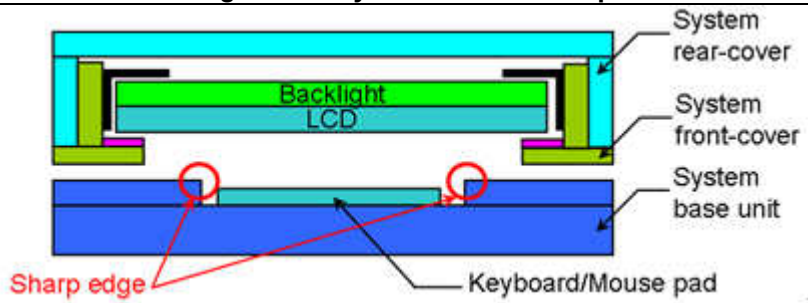	
Definition	To prevent abnormal display & white spot after scuffing test, hinge test, pogo test, backpack test, sharp edge design in keyboard surface may damage panel during the test. We suggest to use slope edge design, or to reduce the thickness difference of keyboard/mouse pad from the nearby surface.
10	**Screw boss height design**
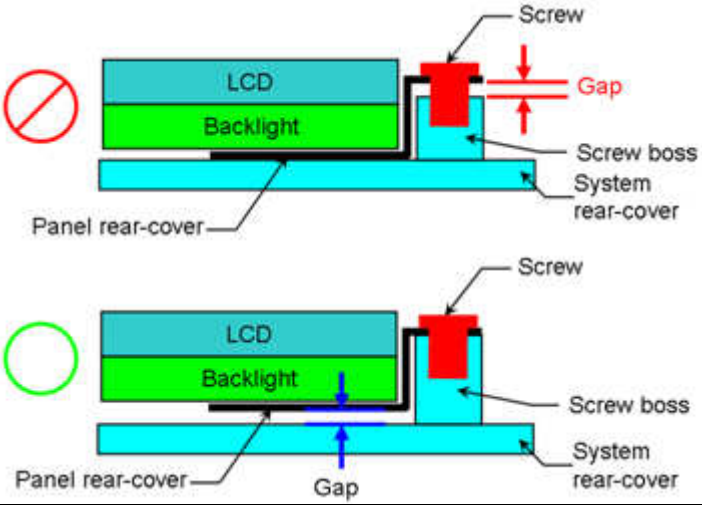	
Definition	Screw boss height should be designed with respect to the height of bracket bottom surface to panel bottom surface + flatness change of panel itself. Because gap will exist between screw boss and bracket, if the screw boss height is smaller. As result while fastening screw, bracket will deformed and pooling issue may occur.
11	**Assembly SOP examination for system front-cover with Hook design**
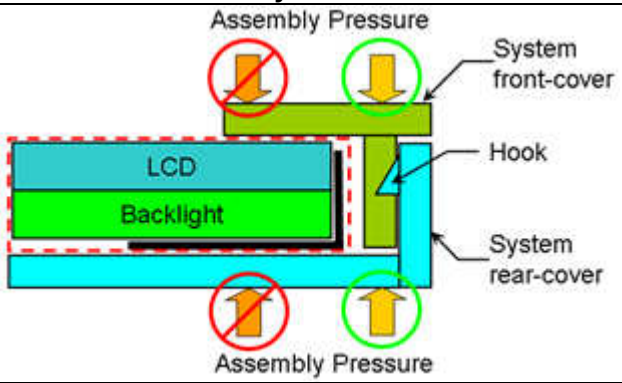	

The copyright belongs to InnoLux. Any unauthorized use is prohibited.

Definition	To prevent panel crack during system front-cover assembly process with hook design, it is not recommended to press panel or any location that related directly to the panel.
12	**Assembly SOP examination for system front-cover with Double tape design**
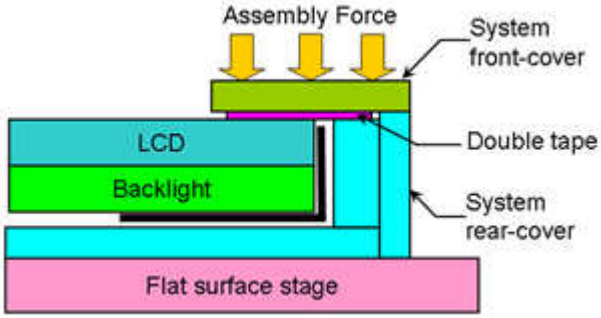	
Definition	To prevent panel crack during system front-cover assembly process with double tape design, it is only allowed to give slight pressure (MAX 3 Kgf/50mm2) with large contact area. This can help to distribute the stress and prevent stress concentration. We also suggest putting the system on a flat surface stage to prevent unequal stress distribution during the assembly.
13	**System front-cover assembly reference with Double tape design**
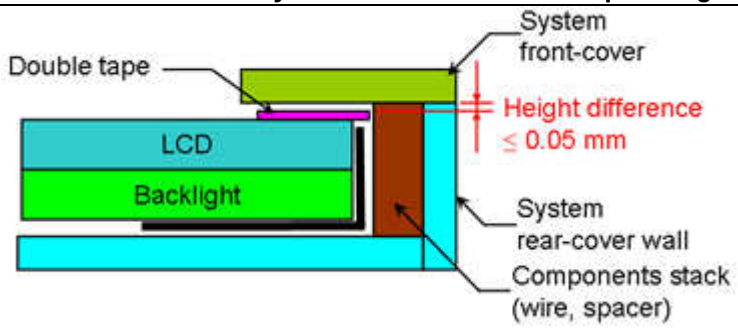	
Definition	To prevent system front-cover peeling at double tape contact area, Height difference between system front-cover assembly reference such as wall or components stack (wire, spacer) and double tape top surface must be less than 0.05mm.
14	**Touch Application : TP and LCD Module Combination for White Line Prevention**

The copyright belongs to InnoLux. Any unauthorized use is prohibited.

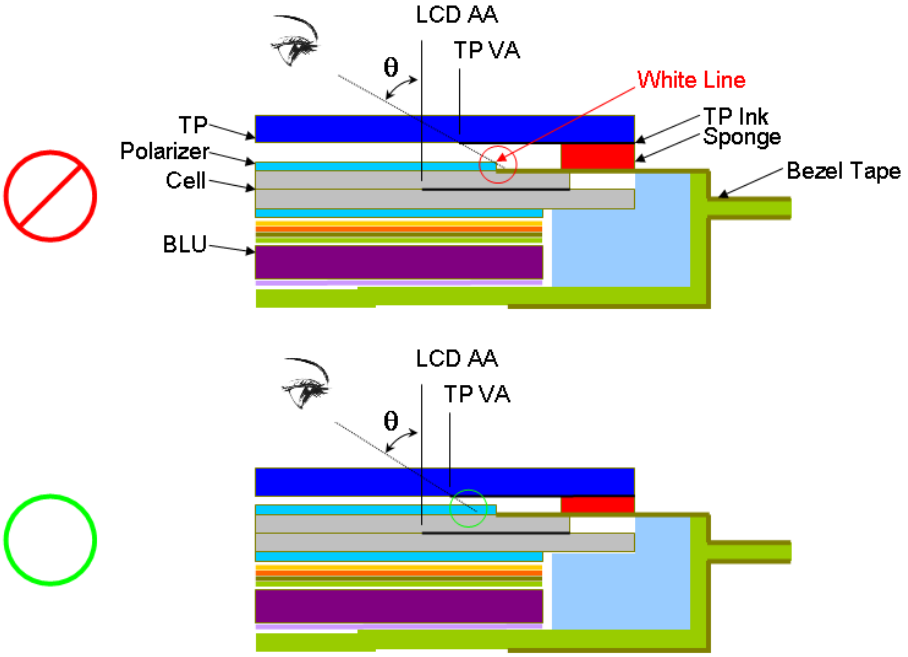

Parameter consideration for White Line Issue :	
1	TP VA to LCD AA distance
2	TP Assembly tolerance
3	TP Ink Printing tolerance
4	Sponge thickness and tolerance
5	Inspection/Viewing Angle specification
6	Polarizer edge to LCD AA distance and tolerance

Polarizer edge to LCD AA distance can be derived by “AA~Outline” – “CF Pol~Outline” with respect to INX 2D Outline Drawing on each side.

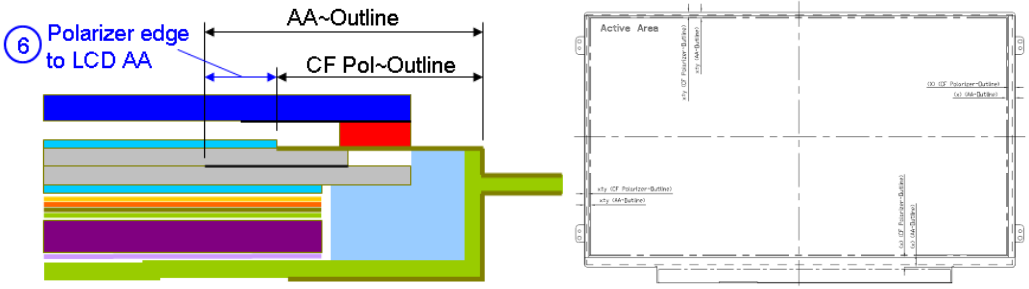

Definition	For using in Touch Application: to prevent White Line appears between TP and LCD module combination, the maximum inspection angle location must not fall onto LCD polarizer edge, otherwise light line near edge of polarizer will be appear. Parameters such as TP VA to LCD AA distance, TP assembly tolerance, TP Ink printing tolerance, Sponge thickness and tolerance, and Maximum Inspection/Viewing Angle, must be considered with respect to LCD module’s Polarizer edge location and tolerance. This consideration must be taken at all four edges separately. The goal is to find parameters combination that allow maximum inspection angle falls inside polarizer black margin area. Note: Information for Polarizer edge location and its tolerance can be derived from INX 2D Outline Drawing (“AA ~Outline“ - “CF Pol~Outline”). Note: Please feel free to contact INX FAE Engineer. By providing value of parameters above on each side, we can help to verify and pass the white line risk feasibility for your reference.

The copyright belongs to InnoLux. Any unauthorized use is prohibited.

Appendix. LCD MODULE HANDLING MANUAL

Purpose	• **This SOP is prepared to prevent panel dysfunction possibility through incorrect handling procedure.** • **This manual provides guide in unpacking and handling steps.** • **Any person which may contact / related with panel, should follow guide stated in this manual to prevent panel loss.**
1.	**Unpacking**

2.	**Panel Lifting**

The copyright belongs to InnoLux. Any unauthorized use is prohibited.

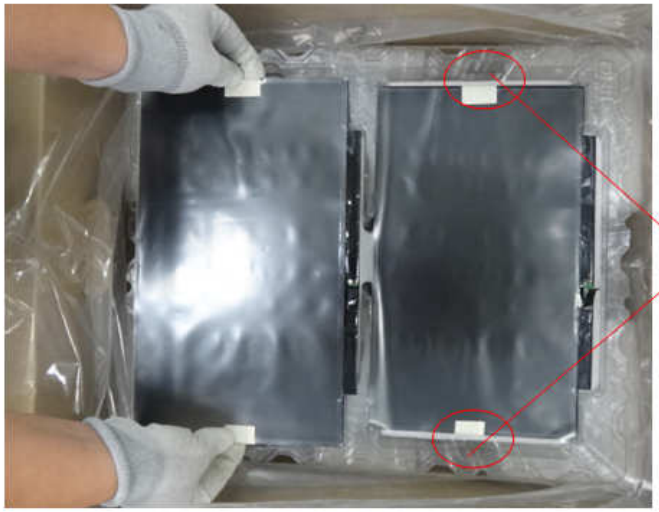

Use slots at both sides for finger insertion.
Handle panel upward with care.

3.	**Do and Don't**

The copyright belongs to InnoLux. Any unauthorized use is prohibited.

Do :

- Handle with both hands.
- Handle panel at left and right edge.

Don't :

- Lifting with one hand.

- Handle at PCBA side.

Don't :

- Stack panels.

- Press panel.

Don't :

- Put foreign stuff onto panel

- Put foreign stuff under panel

The copyright belongs to InnoLux. Any unauthorized use is prohibited.

Don't :

- Paste any material unto white reflector sheet

Don't :

- Pull / Push white reflector sheet

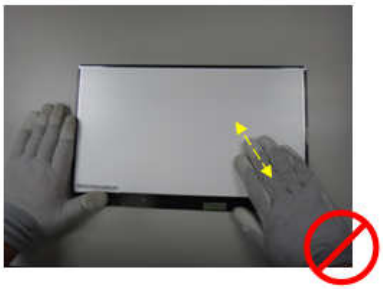

Don't :

- Hold at panel corner.

Don't :

- Twist panel.

The copyright belongs to InnoLux. Any unauthorized use is prohibited.

Do :

- Hold panel at top edge while inserting connector.

Don't :

- Press white reflector sheet while inserting connector.

Do :

- Remove panel protector film starts from side tape.

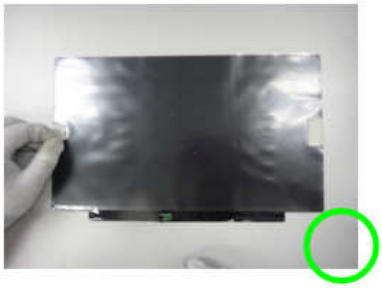

Don't :

- Remove panel protector film from film corner directly before side tape is removed.

The copyright belongs to InnoLux. Any unauthorized use is prohibited.